LESSON 6.1.1

Planning Investigations from Units 4 and 5

Start with the physical relationship you want to test. Then choose measurements that can distinguish it from an alternative explanation.

1. DEFINE THE QUESTION

State the relationship or quantity to determine. Turn the model into a predicted graph, including its axes, slope and intercept.

2. NAME THE VARIABLES

Say what you will change, what you will measure and what must stay fixed. State how each control will actually be maintained.

3. CHOOSE AND JUSTIFY APPARATUS

Include a labelled setup, suitable range, resolution and calibration checks. An instrument name alone is not a measurement method.

4. PLAN THE READINGS

Use a pilot run to choose a safe, informative range and spacing. Include enough distinct values to test the trend and repeats where useful.

5. PLAN THE ANALYSIS

Prepare table headings with units. State calculations, transformations and the meaning of the fitted gradient. Estimate uncertainty in the result.

6. LINK HAZARD TO PRECAUTION

Identify the specific hazard and how exposure or injury will be prevented. Include shutdown, cooling or discharge steps when needed.

MAKE EVERY CHOICE TESTABLE

Replace "repeat to improve accuracy" with what is repeated, how results are combined and what uncertainty is reduced. Repetition alone does not remove a calibration error.

1 Unit 4 plan: capacitor discharge

Aim: test exponential discharge and determine capacitance C using a measured resistor R. Record voltage across the capacitor as a function of elapsed time.

DISCHARGE STAGE: SUPPLY DISCONNECTED

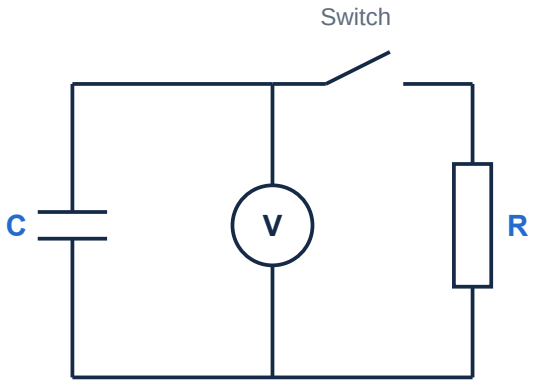

Close switch to discharge through R.

A 0-10 V logger with 0.01 V resolution measures across C. Its input resistance should greatly exceed R. Also use a low-voltage supply and switch.

Illustrative pilot values: 5 V, R about 10 kΩ, C about 1 mF. Expected time constant: about 10 s.

A. SET UP AND CHECK

Check voltage zero and resistor value. Charge the capacitor using a suitable charging circuit; disconnect the supply before the discharge measurement.

B. CAPTURE AND REPEAT

Record every 0.1 s for about 30 s, starting as the switch closes. Repeat at least three full runs, recharging to the same starting voltage each time.

C. FIT THE MODEL

Keep R, C and temperature fixed. Fit ln(voltage / starting voltage) against time for each run. Use positive voltages well above the logger noise floor.

$$\text{slope } s = -\frac{1}{RC} \qquad C = -\frac{1}{Rs}$$

$$C = -\frac{1}{10\,000 \times (-0.0950)} = 1.05 \text{ mF}$$

Illustrative fitted slope: -0.0950 per second. Do not force the intercept to zero if switching or the start reading is imperfect. Compare run-to-run values and include resistor and fit uncertainties.

Validity: logger input resistance must greatly exceed R, or it changes the discharge rate. Safety: respect capacitor polarity and voltage rating; isolate power and discharge through a resistor before rewiring.

Pilot values are a starting design, not a universal apparatus specification.

2 Unit 5 plan: a mass-spring system

Aim: test how oscillation period T depends on added mass m, and use the gradient to estimate the spring constant k. Use small vertical oscillations.

SECURE SUPPORT; CLEAR SPACE BELOW THE LOAD

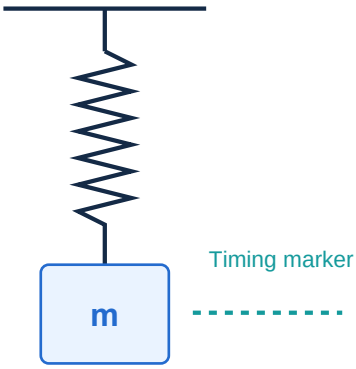

Use a clamped spring, mass hanger, known masses or a balance, and a stopwatch or motion sensor. Secure the stand against tipping.

Example pilot range: 0.10 to 0.60 kg in 0.10 kg steps, only if the spring stays within its elastic limit.

A. MAKE A REPRODUCIBLE MEASUREMENT

Release without pushing. Use a 0.01 s stopwatch to time 20 complete cycles past the marker in the same direction. Repeat three times; divide each time by 20 and average. Keep the spring, hanger and small release amplitude fixed.

B. CHOOSE THE GRAPH BEFORE COLLECTING DATA

$$T^2 = Sm + b \qquad S = \frac{4\pi^2}{k}$$

Plot mean-period squared against added mass, not T against mass. Fixed hanger mass and effective spring mass may give a non-zero intercept b, so do not force the fit through the origin.

ILLUSTRATIVE GRADIENT: S = 1.97 s²/kg

$$k = \frac{4\pi^2}{1.97} = 20.0\ \text{N/m}$$

If the 20-cycle time is 12.40 s with uncertainty ±0.20 s, its percentage uncertainty is about 1.6%. T has the same percentage uncertainty; T² has about 3.2%. Timing many cycles reduces the relative timing error.

Safety: secure masses, keep feet clear and avoid overstretching the spring.

Sources: Pearson specification pp. 30, 35, 39; Student Practical Guide pp. 7-8.

SHM reference: OpenStax §15.1. Next: 6.1.2 Choosing methods for fields, thermodynamics and oscillations.