Show tissues, not individual cells

A plan diagram maps the main tissue regions seen at low power. A transverse section (TS) cuts across the long axis of a stem or root, or through the thickness of a leaf.

1. HERBACEOUS DICOT STEM: TRANSVERSE SECTION

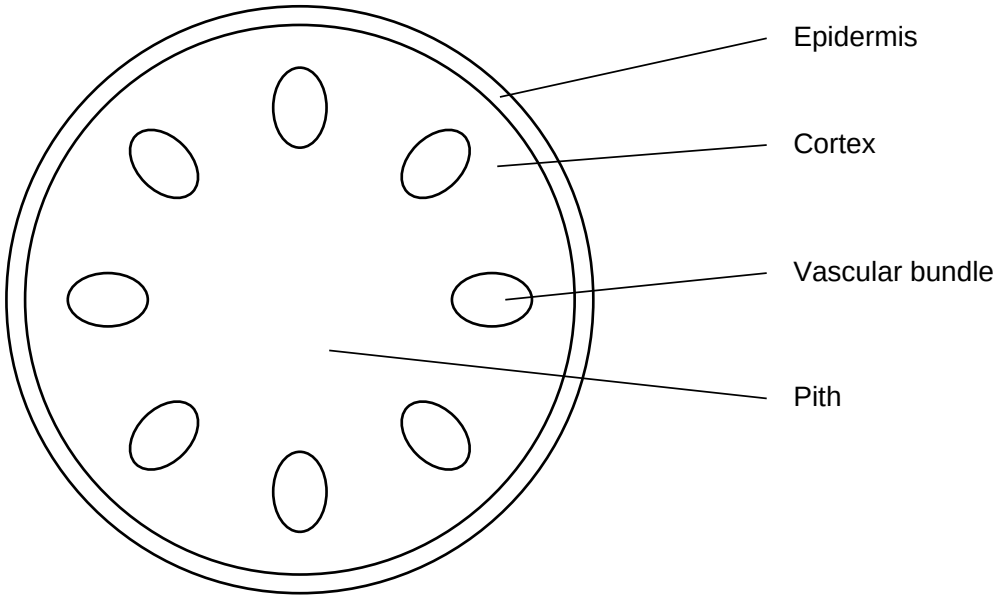

Simplified teaching plan, not traced from a specimen. Each oval represents a whole vascular bundle, not a cell. No scale is implied.

2. OBSERVE BEFORE DRAWING

Start at low power. Find the outer boundary, the main tissue regions and the area requested. For a photomicrograph, inspect the whole image before drawing. Use the specimen, not this model, to decide shape and proportions.

3. KEEP THE TISSUE ARRANGEMENT

This typical young dicot stem has a ring of vascular bundles around a central pith, with cortex outside the ring. Real stems can be angular or irregular; do not force every section into a perfect circle.

Stem tissue arrangement: OpenStax Biology 2e, section 30.2.
Drawing standards: Cambridge 9700 syllabus, practical assessment, pp. 53, 55.

Scope: Cambridge Biology 9700 syllabus, section 7.1, outcome 1, p. 26.

Keep the relative proportions

A good plan preserves the width of tissue layers and the position of their boundaries. Root and stem sections can both look round, but their internal organisation differs.

1. YOUNG DICOT ROOT: TRANSVERSE SECTION

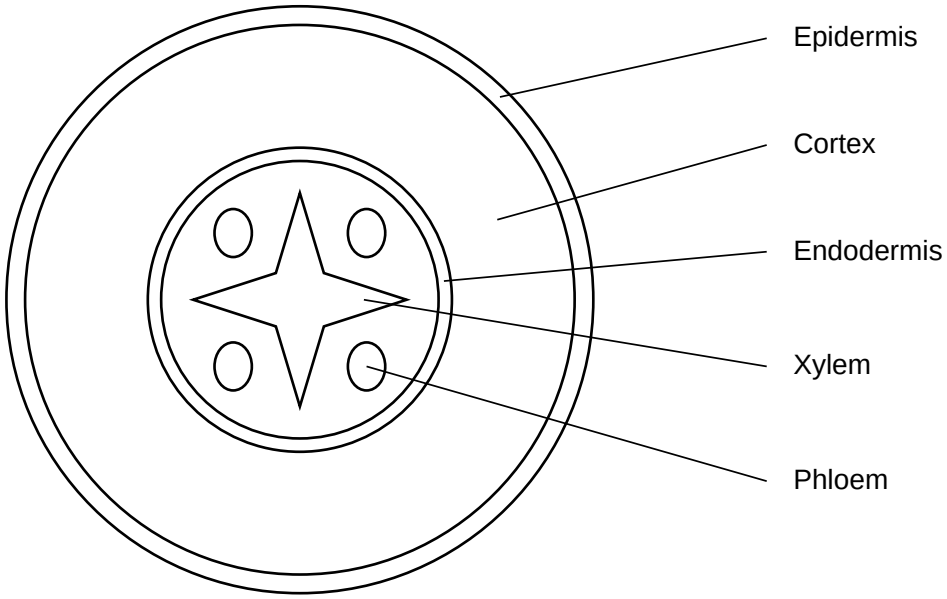

Simplified tissue plan: central xylem and phloem lie inside the endodermis. The small ovals are phloem regions, not individual cells.

2. COMPARE WIDTHS BEFORE ADDING DETAIL

Estimate the diameter of the central vascular region relative to the whole root, then the thickness of the surrounding cortex. Check the distances from the centre to the outside. Keep the same proportions as the supplied section.

3. DO NOT TURN THE ROOT INTO A STEM

A typical young dicot root has central, often star-shaped xylem, with phloem between its arms. Do not add a stem-like ring of separate bundles or a large central pith. Draw only boundaries you can distinguish in the specimen.

Root tissue arrangement: OpenStax Biology 2e, section 30.3.
Drawing standards: Cambridge 9700 syllabus, practical assessment, pp. 53, 55.

Scope: Cambridge Biology 9700 syllabus, section 7.1, outcome 1, p. 26.

Map layers across a leaf

In a leaf transverse section, record the upper and lower surfaces, mesophyll regions and visible veins. The outline must follow the supplied section, including a midrib if it is part of the requested area.

1. DICOT LEAF LAMINA: PART OF A TRANSVERSE SECTION

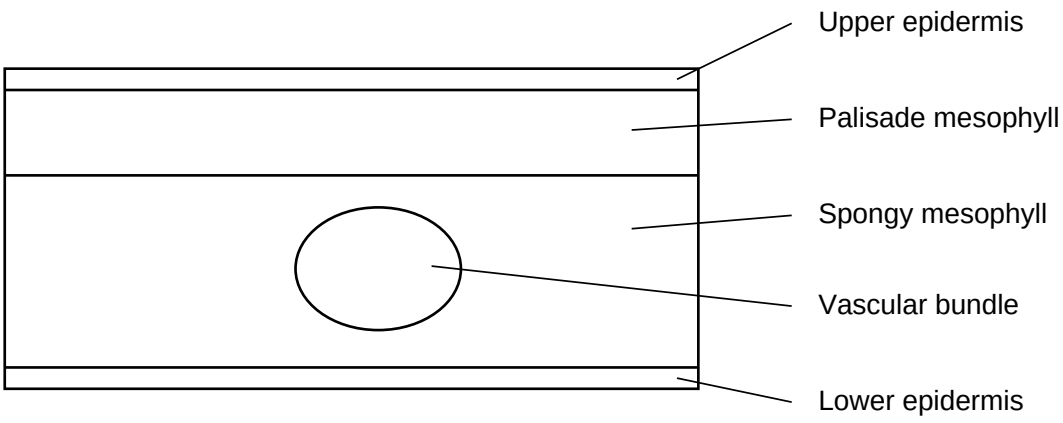

Schematic lamina segment, without a midrib. Left and right edges mark the limits of the area shown, not the margins of a whole leaf. No individual cells or air spaces are drawn.

2. TURN YOUR OBSERVATION INTO A CLEAR PLAN

Use a sharp pencil and clear, unbroken lines. Make the drawing large enough to show tissue boundaries. Avoid shading, colouring and repeated sketch lines. Do not add chloroplasts, nuclei or a mosaic of individual cells.

3. CHECK BEFORE FINISHING

Match the requested area, outline and tissue proportions. Give the organ and section type in the title. Where labels are requested, use straight, non-crossing lines that end on the named region. Add a scale only when measurements support it.

Leaf tissue arrangement: OpenStax Biology 2e, section 30.4.
Drawing standards: Cambridge 9700 syllabus, practical assessment, pp. 53, 55.

Scope: Cambridge Biology 9700 syllabus, section 7.1, outcome 1, p. 26.