One nucleotide, three components

A nucleotide is a building block of DNA and RNA. Identify its sugar, nitrogenous base and phosphate group before considering the larger molecule.

1. THE THREE-PART PLAN

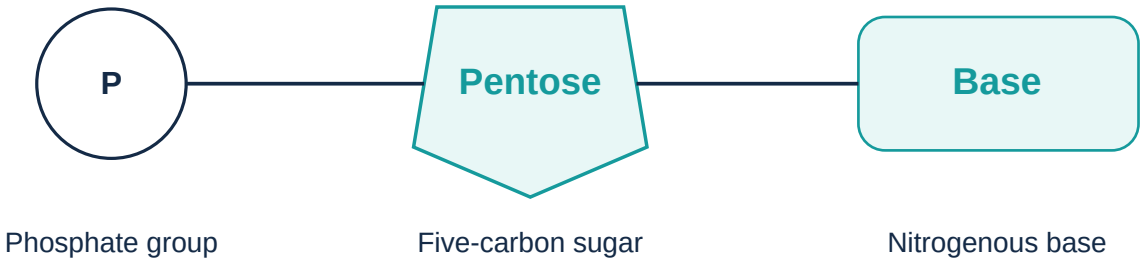

Component symbols, not a structural formula. P represents an entire phosphate group, not a lone phosphorus atom. Lines show which components are joined.

2. THE SUGAR CONNECTS THE COMPONENTS

The base is attached to the pentose sugar; phosphate is also attached to the sugar. A nucleotide may have one or more phosphate groups. The simplest diagram above shows one.

3. NAME THE PART, NOT JUST THE WHOLE

The sugar is ribose in an RNA nucleotide and deoxyribose in a DNA nucleotide. Both are pentoses: each contains five carbon atoms. A nitrogenous base contains nitrogen; it is not an amino acid.

Useful distinction: sugar + base = a nucleoside. Adding phosphate gives a nucleotide. The pentagon is a symbol for the sugar, not a claim that every ring vertex is carbon.

Nucleotide components: NHGRI, Talking Glossary of Genomic and Genetic Terms.
Sugar attachment and nucleic-acid context: OpenStax Biology 2e, section 3.5.

Scope: Cambridge Biology 9700 syllabus, section 6.1, outcome 1, p. 24.

From building block to information

A nucleic acid is a polymer of nucleotides. Many linked nucleotides form a polynucleotide chain; the order of its bases carries information.

1. A SHORT CHAIN SEGMENT

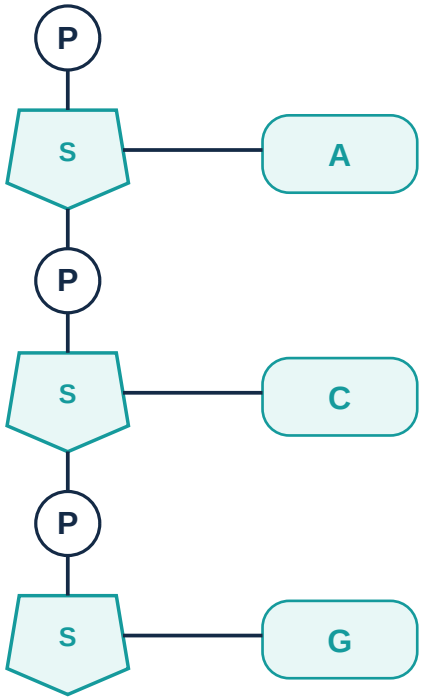

P = phosphate; S = sugar. Bases attach to sugars, not directly to phosphate. Only three residues of one strand are shown.

DNA

Sugar: deoxyribose.

Bases: A, T, C and G.

Stores genetic information.

RNA

Sugar: ribose.

Bases: A, U, C and G.

Has roles in using genetic information, including protein synthesis.

2. BACKBONE AND BASE SEQUENCE ARE DIFFERENT

Alternating sugar and phosphate form the backbone. Bases project from it. The backbone repeats, whereas the order of bases can vary. A base is one component; a nucleotide is the complete building block.

Orientation and lengths are schematic; this is not a complete DNA molecule. Double-helix structure, complementary pairing and detailed bonding follow in later lessons.

DNA and RNA components: NHGRI, Nucleotide.
Polynucleotide structure and biological roles: OpenStax Biology 2e, section 3.5.

Scope: Cambridge Biology 9700 syllabus, section 6.1, outcome 1, p. 24.

ATP: a phosphorylated nucleotide

ATP means adenosine triphosphate. Its structure follows the nucleotide plan, but it has three phosphate groups rather than the one shown on page 1.

1. ADENINE + RIBOSE + THREE PHOSPHATES



Three linked phosphate groups

Ribose + adenine = adenosine

All three P symbols belong to one ATP molecule. ATP is a single nucleotide, not three nucleotides and not a nucleic-acid polymer. Component schematic; no structural formula is required.

2. ITS ROLE IN CELLS - SUPPORTING CONTEXT

ATP transfers energy for cellular work, such as active transport and synthesis. Hydrolysis to ADP and inorganic phosphate releases energy overall. Cells regenerate ATP using energy from other reactions.

3. IDENTIFY ATP FROM ALL ITS COMPONENTS

Look for adenine, ribose and three phosphate groups. Adenine alone is only a base; adenosine is adenine plus ribose. ADP has two phosphate groups and AMP has one. ATP contains ribose, not deoxyribose.

Do not say that breaking a bond alone releases energy: bond breaking requires energy. ATP hydrolysis releases energy because of the overall change from reactants to products. This lesson focuses on recognising ATP structure.

ATP structure and energy-transfer context: OpenStax Biology 2e, section 6.4.

Scope: Cambridge Biology 9700 syllabus, section 6.1, outcome 1, p. 24.