PLACE SEAL HERE

AP® Physics C: Mechanics Exam

SECTION I: Multiple Choice

2013

DO NOT OPEN THIS BOOKLET UNTIL YOU ARE TOLD TO DO SO.

At a Glance

Total Time
45 minutes
Number of Questions
35
Percent of Total Score
50%
Writing Instrument
Pencil required
Electronic Device
None allowed

Instructions

Section I of this exam contains 35 multiple-choice questions. For these questions, fill in only the circles for numbers 1 through 35 on your answer sheet. A table of information that may be helpful is in the booklet. Rulers and straightedges may be used in this section.

Indicate all of your answers to the multiple-choice questions on the answer sheet. No credit will be given for anything written in this exam booklet, but you may use the booklet for notes or scratch work. After you have decided which of the suggested answers is best, completely fill in the corresponding circle on the answer sheet. Give only one answer to each question. If you change an answer, be sure that the previous mark is erased completely. Here is a sample question and answer.

Sample Question	Sample Answer
Chicago is a (A) state (B) city (C) country (D) continent (E) village	Ⓐ ● Ⓒ Ⓓ Ⓔ

Use your time effectively, working as quickly as you can without losing accuracy. Do not spend too much time on any one question. Go on to other questions and come back to the ones you have not answered if you have time. It is not expected that everyone will know the answers to all of the multiple-choice questions.

Your total score on the multiple-choice section is based only on the number of questions answered correctly. Points are not deducted for incorrect answers or unanswered questions.

PLACE SEAL HERE

Form I
Form Code 4JBP4-S

80

PLACE SEAL HERE
DO NOT seal answer sheet inside

TABLE OF INFORMATION DEVELOPED FOR 2012

CONSTANTS AND CONVERSION FACTORS

Proton mass,	$m_p = 1.67 \times 10^{-27}$ kg	Electron charge magnitude,	$e = 1.60 \times 10^{-19}$ C
Neutron mass,	$m_n = 1.67 \times 10^{-27}$ kg	1 electron volt,	1 eV $= 1.60 \times 10^{-19}$ J
Electron mass,	$m_e = 9.11 \times 10^{-31}$ kg	Speed of light,	$c = 3.00 \times 10^{8}$ m/s
Avogadro's number,	$N_0 = 6.02 \times 10^{23}$ mol^{-1}	Universal gravitational constant,	$G = 6.67 \times 10^{-11}$ m^3/kg·s^2
Universal gas constant,	$R = 8.31$ J/(mol·K)	Acceleration due to gravity at Earth's surface,	$g = 9.8$ m/s^2
Boltzmann's constant,	$k_B = 1.38 \times 10^{-23}$ J/K		

1 unified atomic mass unit,	1 u $= 1.66 \times 10^{-27}$ kg $= 931$ MeV/c^2
Planck's constant,	$h = 6.63 \times 10^{-34}$ J·s $= 4.14 \times 10^{-15}$ eV·s
	$hc = 1.99 \times 10^{-25}$ J·m $= 1.24 \times 10^{3}$ eV·nm
Vacuum permittivity,	$\epsilon_0 = 8.85 \times 10^{-12}$ C^2/N·m^2
Coulomb's law constant,	$k = 1/4\pi\epsilon_0 = 9.0 \times 10^{9}$ N·m^2/C^2
Vacuum permeability,	$\mu_0 = 4\pi \times 10^{-7}$ (T·m)/A
Magnetic constant,	$k' = \mu_0/4\pi = 1 \times 10^{-7}$ (T·m)/A
1 atmosphere pressure,	1 atm $= 1.0 \times 10^{5}$ N/m^2 $= 1.0 \times 10^{5}$ Pa

UNIT SYMBOLS	meter,	m	mole,	mol	watt,	W	farad,	F
	kilogram,	kg	hertz,	Hz	coulomb,	C	tesla,	T
	second,	s	newton,	N	volt,	V	degree Celsius,	°C
	ampere,	A	pascal,	Pa	ohm,	Ω	electron-volt,	eV
	kelvin,	K	joule,	J	henry,	H		

PREFIXES

Factor	Prefix	Symbol
10^{9}	giga	G
10^{6}	mega	M
10^{3}	kilo	k
10^{-2}	centi	c
10^{-3}	milli	m
10^{-6}	micro	μ
10^{-9}	nano	n
10^{-12}	pico	p

VALUES OF TRIGONOMETRIC FUNCTIONS FOR COMMON ANGLES

θ	0°	30°	37°	45°	53°	60°	90°
$\sin\theta$	0	$1/2$	$3/5$	$\sqrt{2}/2$	$4/5$	$\sqrt{3}/2$	1
$\cos\theta$	1	$\sqrt{3}/2$	$4/5$	$\sqrt{2}/2$	$3/5$	$1/2$	0
$\tan\theta$	0	$\sqrt{3}/3$	$3/4$	1	$4/3$	$\sqrt{3}$	∞

The following conventions are used in this exam.

I. Unless otherwise stated, the frame of reference of any problem is assumed to be inertial.

II. The direction of any electric current is the direction of flow of positive charge (conventional current).

III. For any isolated electric charge, the electric potential is defined as zero at an infinite distance from the charge.

PHYSICS C: MECHANICS
SECTION I
Time—45 minutes
35 Questions

Directions: Each of the questions or incomplete statements below is followed by five suggested answers or completions. Select the one that is best in each case and then fill in the corresponding circle on the answer sheet.

Note: To simplify calculations, you may use $g = 10\,\text{m/s}^2$ in all problems.

Questions 1-3

An object of mass 10 kg starts from rest at time $t = 0$ and moves in a straight line. For time $t > 0$, the object's velocity v as a function of time t is given by $v = 2t + 3t^2$, where v is in m/s and t is in seconds.

1. How far does the object travel during the first 10 s of its motion?

   (A) 62 m
   (B) 320 m
   (C) 383 m
   (D) 1100 m
   (E) 1600 m

2. What is the instantaneous net force that acts on the object at $t = 2$ s ?

   (A) 140 N
   (B) 160 N
   (C) 320 N
   (D) 1280 N
   (E) 2560 N

3. How much work is done by the net force between $t = 0$ and $t = 1$ s ?

   (A) 5 J
   (B) 50 J
   (C) 125 J
   (D) 250 J
   (E) 500 J

4. Persons X, Y, and Z walk along a circular path of radius 50 m. Person X walks halfway around the path, Person Y walks 3/4 of the way around the path, and Person Z walks completely around the path. Which of the following correctly lists the walkers in order of the magnitudes of their displacement vectors from the least to the greatest?

   (A) $X < Y < Z$
   (B) $X < Z < Y$
   (C) $Y < X < Z$
   (D) $Y < Z < X$
   (E) $Z < Y < X$

5. A small particle starts from rest from the origin of an xy-coordinate system and travels in the xy-plane. Its acceleration in the x-direction is $2.0\ \text{m/s}^2$, and its acceleration in the y-direction is $1.0\ \text{m/s}^2$. What is the x-coordinate of the particle when its y-coordinate is 12 m?

   (A) 3.0 m
   (B) 6.0 m
   (C) 12 m
   (D) 24 m
   (E) 48 m

6. If the speed of an object moving in a straight line is increasing at a constant rate, the net force acting on the object is

   (A) zero
   (B) constant, but not zero
   (C) decreasing at a constant rate
   (D) increasing at a constant rate
   (E) changing at a rate proportional to the average velocity

Unauthorized copying or reuse of any part of this page is illegal.

GO ON TO THE NEXT PAGE.

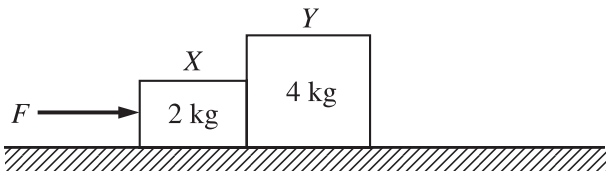

7. A force F accelerates a system of two blocks, X and Y, on a horizontal frictionless surface, as shown above. The acceleration is $4\ \text{m/s}^2$. The force with which block Y pushes on block X has magnitude

   (A) zero
   (B) 6 N
   (C) 8 N
   (D) 16 N
   (E) 24 N

8. A hoop of mass m and radius r rolls with constant speed on a horizontal surface without slipping. What is the hoop's translational kinetic energy divided by its rotational kinetic energy?

   (A) 4
   (B) 2
   (C) 1
   (D) 1/2
   (E) 1/4

9. The rotational inertia of a sphere of mass M and radius R about a diameter is $\frac{2}{5}MR^2$. The rotational inertia about an axis tangent to the sphere is

   (A) $\frac{3}{2}MR^2$
   (B) $\frac{7}{5}MR^2$
   (C) MR^2
   (D) $\frac{1}{2}MR^2$
   (E) $\frac{2}{5}MR^2$

10. All of the following are vector quantities EXCEPT

    (A) rotational kinetic energy
    (B) torque
    (C) angular momentum
    (D) angular velocity
    (E) centripetal acceleration

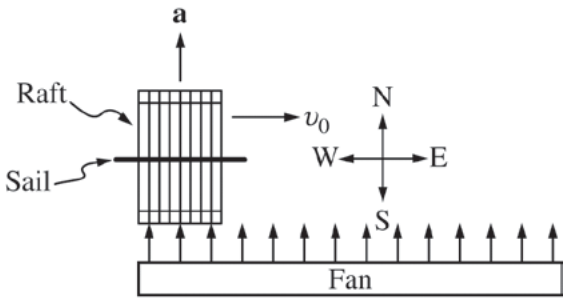

Top View

11. The toy raft shown in the top view above is sliding due east on frictionless ice at constant speed v_0 when a fan blows on its sail, producing a constant acceleration **a** directed to the north. Which of the following could indicate the path of the raft while the fan is blowing?

    (A) 
    (B) 
    (C)
    (D)
    (E) 

Unauthorized copying or reuse of any part of this page is illegal.

GO ON TO THE NEXT PAGE.

12. The velocity v in meters per second of an object moving in a straight line is given as a function of time t in seconds by $v = 4t^3 + 2t$. The total distance the object travels between $t = 1$ s and $t = 2$ s is

(A) 12 m
(B) 18 m
(C) 24 m
(D) 30 m
(E) 36 m

13. Two small spheres, each with a mass of 3.0 kg, are placed 6.0 m apart. Which of the following is the order of magnitude of the gravitational attraction between them?

(A) 10^{-15} N
(B) 10^{-13} N
(C) 10^{-11} N
(D) 10^{-9} N
(E) 10^{-7} N

14. A satellite of mass m is in a circular orbit with speed v_0 at a distance r from the center of Earth. What is the ratio of its escape speed from the orbit to its orbital speed, v_e/v_0 ?

(A) $\sqrt{2}$
(B) 2
(C) 1
(D) $\frac{1}{2}$
(E) $\frac{1}{\sqrt{2}}$

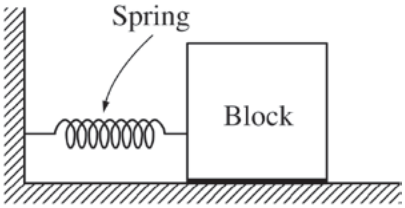

15. The block shown above is attached to a rigid wall by means of an ideal spring and moves on a horizontal surface with negligible friction. The block oscillates with a period T. If a second ideal spring, identical to the first, is placed above the first spring and attached to the wall and the block, the new oscillation period of the block is

(A) $T/2$
(B) $T/\sqrt{2}$
(C) T
(D) $\sqrt{2}T$
(E) $2T$

16. An object on the end of a spring of force constant k moves in simple harmonic motion with amplitude A and frequency f. Which of the following is a possible expression for the potential energy of the spring as a function of time t ?

(A) $\frac{1}{2}kA^2 \sin^2(2\pi ft)$
(B) $kA^2 \cos^2(2\pi ft)$
(C) $kA \sin(2\pi ft)$
(D) $\frac{1}{2}kA \cos(2\pi ft)$
(E) $kA(\sin 2\pi ft + \cos 2\pi ft)$

Unauthorized copying or reuse of any part of this page is illegal.

GO ON TO THE NEXT PAGE.

17. A wheel with rotational inertia $0.04\ \text{kg}\cdot\text{m}^2$ and radius 0.02 m is turning at the rate of 10 revolutions per second when a frictional torque is applied to stop it. How much work is done by the torque in stopping the wheel?

(A) -0.0008 J
(B) -0.4π J
(C) -2 J
(D) $-2\pi^2$ J
(E) $-8\pi^2$ J

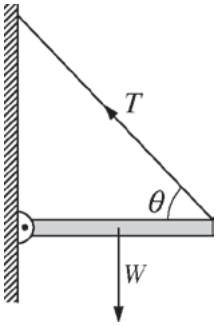

18. A uniform beam of weight W is attached to a wall by a pivot at one end and is held horizontal by a cable attached to the other end of the beam and to the wall, as shown above. T is the tension in the cable, which makes an angle θ with the beam. Which of the following is equal to T?

(A) $\dfrac{W}{2\cos\theta}$
(B) $\dfrac{W}{2\sin\theta}$
(C) $\dfrac{W}{\cos\theta}$
(D) $\dfrac{W}{\sin\theta}$
(E) W

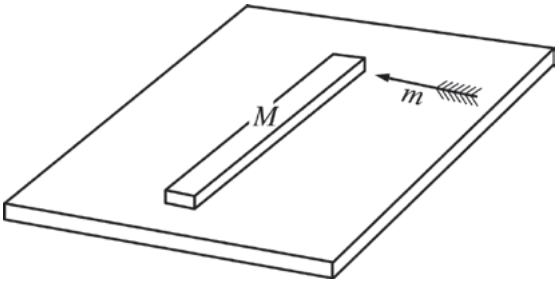

19. An arrow of mass m and speed v_0 strikes and sticks to one end of a meterstick of mass M as shown in the diagram above. The meterstick is initially at rest on a horizontal surface and free to move without friction. The speed of the center of mass of the stick-arrow system after the arrow strikes is given by which of the following expressions?

(A) $\dfrac{1}{2}(M+m){v_0}^2$
(B) $\dfrac{mv_0}{M}$
(C) $\dfrac{mv_0}{M+m}$
(D) $\dfrac{v_0}{2}$
(E) 0

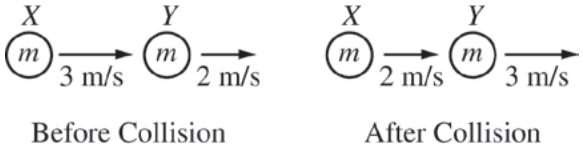

20. Object X of mass m is moving to the right with a speed of 3 m/s when it collides with object Y of mass m that is moving to the right with a speed of 2 m/s, as shown above. After the collision, X is moving to the right with a speed of 2 m/s and Y is moving to the right with a speed of 3 m/s. Which of the following is true of the collision?

(A) It is elastic because momentum is conserved.
(B) It is elastic because kinetic energy is conserved.
(C) It is inelastic because momentum is not conserved.
(D) It is inelastic because kinetic energy is not conserved.
(E) More information is needed to determine whether the collision is elastic or inelastic.

Unauthorized copying or reuse of any part of this page is illegal.

GO ON TO THE NEXT PAGE.

Questions 21-22

A 20 kg box moving at an initial speed of 10 m/s slides 25 m to the right on a horizontal floor before it comes to a complete stop.

21. What is the coefficient of friction between the box and the floor?

(A) 0.10
(B) 0.20
(C) 0.40
(D) 0.60
(E) 0.80

22. Which of the following best describes the frictional forces exerted on the box and on the floor while the box is sliding?

	Box	Floor
(A)	None	None
(B)	To the right	To the right
(C)	To the right	To the left
(D)	To the left	None
(E)	To the left	To the right

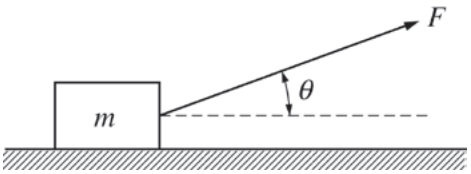

23. A block of mass m is pulled across a rough horizontal surface at constant speed by a force of magnitude F, which acts at an angle of θ to the horizontal, as shown above. The coefficient of kinetic friction between the block and the surface is

(A) $\frac{F}{mg}$

(B) $\frac{F\sin\theta}{mg}$

(C) $\frac{F\cos\theta}{mg}$

(D) $\frac{F\sin\theta}{mg - F\cos\theta}$

(E) $\frac{F\cos\theta}{mg - F\sin\theta}$

Unauthorized copying or reuse of any part of this page is illegal.

GO ON TO THE NEXT PAGE.

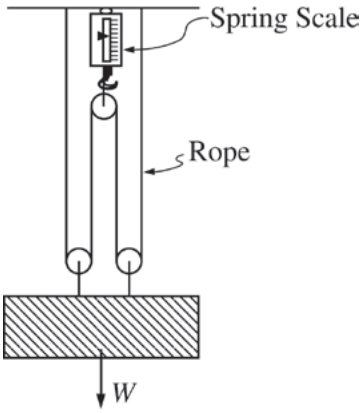

24. The rope-and-pulley system of negligible mass shown above supports a block of weight W that is at rest. If the tension throughout the rope is uniform, what is the reading on the spring scale?

(A) W

(B) $\frac{W}{2}$

(C) $\frac{W}{3}$

(D) $\frac{W}{4}$

(E) $\frac{W}{8}$

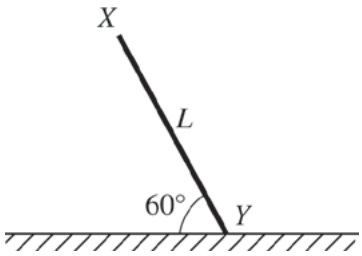

25. The uniform rod of length L shown above is supported by holding end X so that the rod makes an angle $60°$ with the horizontal floor. There is no friction acting between the rod and the floor. When the support at X is removed, the rod falls under the influence of gravity. Which of the following best describes the movement of end Y as the rod falls?

(A) It moves $\frac{1}{2}L$ to the left.

(B) It remains at rest.

(C) It moves $\frac{1}{4}L$ to the right.

(D) It moves $\frac{1}{2}L$ to the right.

(E) It moves $\frac{3}{4}L$ to the right.

26. In an experiment, an object is released from rest from the top of a building. Its speed v is measured as it reaches a point that is a distance d from the point of release. If this distance was doubled, what would the new speed be, assuming air resistance is negligible?

(A) v
(B) $\sqrt{2}\,v$
(C) $2v$
(D) $4v$
(E) $8v$

Unauthorized copying or reuse of any part of this page is illegal.

GO ON TO THE NEXT PAGE.

27. A particle moves on a straight line with a speed v that changes with time t according to the equation $v = v_0 e^{-\beta t}$, where v_0 and β are constants. The acceleration a of the particle is related to its speed by which of the following equations?

(A) $a = -\beta v$

(B) $a = -\beta v^2$

(C) $a = -\beta v t$

(D) $a = -v/t$

(E) $a = -v_0/t$

28. The relationship between the magnitude of the restoring force F and the resultant displacement x from equilibrium for a nonlinear spring is given by the equation $F = kx^2$. What is the potential energy of the spring when it has been compressed a distance x_0 ?

(A) kx_0^3

(B) $\frac{1}{2} kx_0^2$

(C) $\frac{1}{2} kx_0^3$

(D) $\frac{1}{3} kx_0^2$

(E) $\frac{1}{3} kx_0^3$

29. The period T of a pendulum of length L is measured to determine g at the surface of Earth. The equation used is $T = 2\pi\sqrt{L/g}$. The mass of the pendulum bob is 10.0 kg, and the length of the pendulum is 1.00 m. Which of the following would contribute most to the expected error in the result?

(A) A 10% uncertainty in the measurement of the mass
(B) Approximating the value of π as 3.14
(C) Variation in the value of g as the pendulum bob moves along its arc
(D) Using the average period of 10 timed oscillations instead of the period of 1 timed oscillation
(E) Starting the pendulum swinging by releasing it from a horizontal position

30. If a person goes to the bottom of a deep mine shaft on a planet of uniform density, which of the following is true?

(A) The person's weight is exactly the same as at the surface.
(B) The person's weight is greater than at the surface.
(C) The person's weight is less than at the surface.
(D) The person's weight may increase or decrease, depending on the density of the planet.
(E) The gravitational force on the person changes in direction but not in magnitude.

Unauthorized copying or reuse of any part of this page is illegal.

GO ON TO THE NEXT PAGE.

31. A certain satellite in a circular orbit of radius r remains vertically above a certain point on Earth's equator. Which of the following expressions correctly gives r in terms of ω (the angular velocity of Earth's rotation about its axis), M (the mass of Earth), and G (the universal gravitational constant) ?

(A) $r = \dfrac{\omega^2}{GM}$

(B) $r = \dfrac{GM}{\omega}$

(C) $r^2 = \dfrac{GM}{\omega}$

(D) $r^3 = \omega^2 GM$

(E) $r^3 = \dfrac{GM}{\omega^2}$

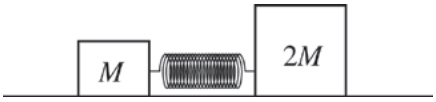

32. Two blocks of masses M and $2M$ are on a frictionless horizontal surface, as shown above, and are held in place with a compressed spring of negligible mass between them. If the blocks are then released and the block of mass $2M$ leaves the spring with a velocity v, the velocity of the center of mass of the blocks is

(A) zero

(B) $-\dfrac{v}{2}$

(C) $-\dfrac{2v}{3}$

(D) $-\dfrac{3v}{2}$

(E) $-2v$

Unauthorized copying or reuse of any part of this page is illegal.

GO ON TO THE NEXT PAGE.

Questions 33-34

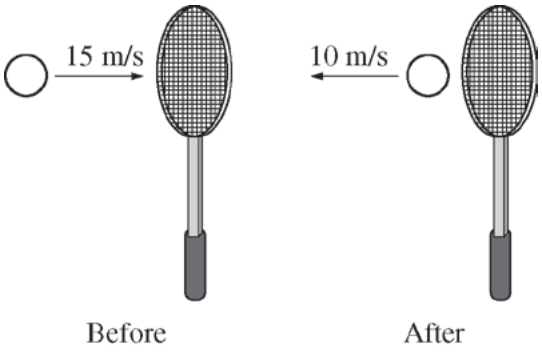

A 0.060 kg tennis ball moving at 15 m/s strikes a tennis racket and rebounds at 10 m/s in the opposite direction, as shown above. The ball is in contact with the racket for 0.030 s.

33. What is the magnitude of the average force exerted by the racket on the ball?

(A) 5 N
(B) 10 N
(C) 20 N
(D) 25 N
(E) 50 N

34. How does the magnitude of the average force exerted by the ball on the racket compare to the magnitude of the average force exerted by the racket on the ball?

(A) It is less.
(B) It is equal.
(C) It is greater.
(D) It cannot be determined without knowing the mass of the racket.
(E) It cannot be determined without knowing the recoil speed of the racket.

Unauthorized copying or reuse of any part of this page is illegal.

GO ON TO THE NEXT PAGE.

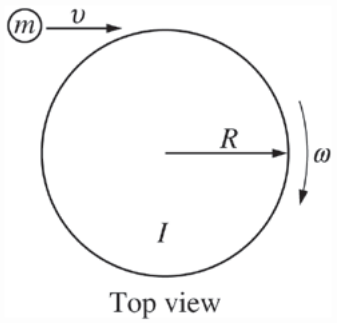

35. A circular platform has a radius R and rotational inertia I. The platform rotates around a fixed pivot at its center with negligible friction and an initial angular velocity ω. A child of mass m (represented by the small circle in the figure above) runs tangentially with speed v and jumps on the outer edge of the platform. When the child is standing on the outer edge of the platform, the new angular velocity is

(A) ω

(B) $\dfrac{I\omega}{I + mR^2}$

(C) $\dfrac{I\omega + mvR}{I + mR^2}$

(D) $\left(\dfrac{I\omega^2 + mv^2}{I}\right)^{1/2}$

(E) $\left(\dfrac{I\omega^2 + mv^2}{I + mR^2}\right)^{1/2}$

Unauthorized copying or reuse of any part of this page is illegal.

GO ON TO THE NEXT PAGE.

S T O P

END OF MECHANICS SECTION I

IF YOU FINISH BEFORE TIME IS CALLED,
YOU MAY CHECK YOUR WORK ON MECHANICS SECTION I ONLY.

DO NOT TURN TO ANY OTHER TEST MATERIALS.

MAKE SURE YOU HAVE DONE THE FOLLOWING.

- **PLACED YOUR AP NUMBER LABEL ON YOUR ANSWER SHEET**
- **WRITTEN AND GRIDDED YOUR AP NUMBER CORRECTLY ON YOUR ANSWER SHEET**
- **TAKEN THE AP EXAM LABEL FROM THE FRONT OF THIS BOOKLET AND PLACED IT ON YOUR ANSWER SHEET**

AP® Physics C: Mechanics Exam

SECTION II: Free Response

2013

DO NOT OPEN THIS BOOKLET UNTIL YOU ARE TOLD TO DO SO.

At a Glance

Total Time
45 minutes
Number of Questions
3
Percent of Total Score
50%
Writing Instrument
Either pencil or pen with black or dark blue ink
Electronic Device
Calculator allowed
Weight
The questions are weighted equally.

IMPORTANT Identification Information

PLEASE PRINT WITH PEN:

1. First two letters of your last name ☐☐
   First letter of your first name ☐
2. Date of birth
   ☐☐ Month ☐☐ Day ☐☐☐☐ Year
3. Six-digit school code
   ☐☐☐☐☐☐
4. Unless I check the box below, I grant the College Board the unlimited right to use, reproduce, and publish my free-response materials, both written and oral, for educational research and instructional purposes. My name and the name of my school will not be used in any way in connection with my free-response materials. I understand that I am free to mark "No" with no effect on my score or its reporting.
   No, I do not grant the College Board these rights. ☐

Instructions

The questions for Section II are printed in this booklet. You may use any blank space in the booklet for scratch work, but you must write your answers in the spaces provided for each answer. A table of information and lists of equations that may be helpful are in the booklet. Calculators, rulers, and straightedges may be used in this section.

All final numerical answers should include appropriate units. Credit for your work depends on demonstrating that you know which physical principles would be appropriate to apply in a particular situation. Therefore, you should show your work for each part in the space provided after that part. If you need more space, be sure to clearly indicate where you continue your work. Credit will be awarded only for work that is clearly designated as the solution to a specific part of a question. Credit also depends on the quality of your solutions and explanations, so you should show your work.

Write clearly and legibly. Cross out any errors you make; erased or crossed-out work will not be scored. You may lose credit for incorrect work that is not crossed out.

Manage your time carefully. You may proceed freely from one question to the next. You may review your responses if you finish before the end of the exam is announced.

Form I
Form Code Z-4BBP2-S2

TABLE OF INFORMATION DEVELOPED FOR 2012

CONSTANTS AND CONVERSION FACTORS

Proton mass,	$m_p = 1.67 \times 10^{-27}$ kg	Electron charge magnitude,	$e = 1.60 \times 10^{-19}$ C
Neutron mass,	$m_n = 1.67 \times 10^{-27}$ kg	1 electron volt,	1 eV $= 1.60 \times 10^{-19}$ J
Electron mass,	$m_e = 9.11 \times 10^{-31}$ kg	Speed of light,	$c = 3.00 \times 10^{8}$ m/s
Avogadro's number,	$N_0 = 6.02 \times 10^{23}$ mol^{-1}	Universal gravitational constant,	$G = 6.67 \times 10^{-11}$ m^3/kg·s^2
Universal gas constant,	$R = 8.31$ J/(mol·K)	Acceleration due to gravity at Earth's surface,	$g = 9.8$ m/s^2
Boltzmann's constant,	$k_B = 1.38 \times 10^{-23}$ J/K		

1 unified atomic mass unit,	1 u $= 1.66 \times 10^{-27}$ kg $= 931$ MeV/c^2
Planck's constant,	$h = 6.63 \times 10^{-34}$ J·s $= 4.14 \times 10^{-15}$ eV·s
	$hc = 1.99 \times 10^{-25}$ J·m $= 1.24 \times 10^{3}$ eV·nm
Vacuum permittivity,	$\epsilon_0 = 8.85 \times 10^{-12}$ C^2/N·m^2
Coulomb's law constant,	$k = 1/4\pi\epsilon_0 = 9.0 \times 10^{9}$ N·m^2/C^2
Vacuum permeability,	$\mu_0 = 4\pi \times 10^{-7}$ (T·m)/A
Magnetic constant,	$k' = \mu_0/4\pi = 1 \times 10^{-7}$ (T·m)/A
1 atmosphere pressure,	1 atm $= 1.0 \times 10^{5}$ N/m^2 $= 1.0 \times 10^{5}$ Pa

UNIT SYMBOLS								
	meter,	m	mole,	mol	watt,	W	farad,	F
	kilogram,	kg	hertz,	Hz	coulomb,	C	tesla,	T
	second,	s	newton,	N	volt,	V	degree Celsius,	°C
	ampere,	A	pascal,	Pa	ohm,	Ω	electron-volt,	eV
	kelvin,	K	joule,	J	henry,	H		

PREFIXES		
Factor	Prefix	Symbol
10^{9}	giga	G
10^{6}	mega	M
10^{3}	kilo	k
10^{-2}	centi	c
10^{-3}	milli	m
10^{-6}	micro	μ
10^{-9}	nano	n
10^{-12}	pico	p

VALUES OF TRIGONOMETRIC FUNCTIONS FOR COMMON ANGLES							
θ	0°	30°	37°	45°	53°	60°	90°
$\sin\theta$	0	1/2	3/5	$\sqrt{2}/2$	4/5	$\sqrt{3}/2$	1
$\cos\theta$	1	$\sqrt{3}/2$	4/5	$\sqrt{2}/2$	3/5	1/2	0
$\tan\theta$	0	$\sqrt{3}/3$	3/4	1	4/3	$\sqrt{3}$	∞

The following conventions are used in this exam.

I. Unless otherwise stated, the frame of reference of any problem is assumed to be inertial.

II. The direction of any electric current is the direction of flow of positive charge (conventional current).

III. For any isolated electric charge, the electric potential is defined as zero at an infinite distance from the charge.

ADVANCED PLACEMENT PHYSICS C EQUATIONS DEVELOPED FOR 2012

MECHANICS

$$\upsilon = \upsilon_0 + at$$

$$x = x_0 + \upsilon_0 t + \frac{1}{2}at^2$$

$$\upsilon^2 = \upsilon_0^2 + 2a(x - x_0)$$

$$\sum \mathbf{F} = \mathbf{F}_{net} = m\mathbf{a}$$

$$\mathbf{F} = \frac{d\mathbf{p}}{dt}$$

$$\mathbf{J} = \int \mathbf{F}\,dt = \Delta\mathbf{p}$$

$$\mathbf{p} = m\mathbf{v}$$

$$F_{fric} \le \mu N$$

$$W = \int \mathbf{F} \bullet d\mathbf{r}$$

$$K = \frac{1}{2}m\upsilon^2$$

$$P = \frac{dW}{dt}$$

$$P = \mathbf{F} \bullet \mathbf{v}$$

$$\Delta U_g = mgh$$

$$a_c = \frac{\upsilon^2}{r} = \omega^2 r$$

$$\boldsymbol{\tau} = \mathbf{r} \times \mathbf{F}$$

$$\sum \boldsymbol{\tau} = \boldsymbol{\tau}_{net} = I\boldsymbol{\alpha}$$

$$I = \int r^2 dm = \sum mr^2$$

$$\mathbf{r}_{cm} = \sum m\mathbf{r} / \sum m$$

$$\upsilon = r\omega$$

$$\mathbf{L} = \mathbf{r} \times \mathbf{p} = I\boldsymbol{\omega}$$

$$K = \frac{1}{2}I\omega^2$$

$$\omega = \omega_0 + \alpha t$$

$$\theta = \theta_0 + \omega_0 t + \frac{1}{2}\alpha t^2$$

a = acceleration
F = force
f = frequency
h = height
I = rotational inertia
J = impulse
K = kinetic energy
k = spring constant
ℓ = length
L = angular momentum
m = mass
N = normal force
P = power
p = momentum
r = radius or distance
$\mathbf{r}$ = position vector
T = period
t = time
U = potential energy
υ = velocity or speed
W = work done on a system
x = position
μ = coefficient of friction
θ = angle
τ = torque
ω = angular speed
α = angular acceleration
ϕ = phase angle

$$\mathbf{F}_s = -k\mathbf{x}$$

$$U_s = \frac{1}{2}kx^2$$

$$x = x_{\max}\cos(\omega t + \phi)$$

$$T = \frac{2\pi}{\omega} = \frac{1}{f}$$

$$T_s = 2\pi\sqrt{\frac{m}{k}}$$

$$T_p = 2\pi\sqrt{\frac{\ell}{g}}$$

$$\mathbf{F}_G = -\frac{Gm_1m_2}{r^2}\hat{\mathbf{r}}$$

$$U_G = -\frac{Gm_1m_2}{r}$$

ELECTRICITY AND MAGNETISM

$$F = \frac{1}{4\pi\epsilon_0}\frac{q_1q_2}{r^2}$$

$$\mathbf{E} = \frac{\mathbf{F}}{q}$$

$$\oint \mathbf{E} \bullet d\mathbf{A} = \frac{Q}{\epsilon_0}$$

$$E = -\frac{dV}{dr}$$

$$V = \frac{1}{4\pi\epsilon_0}\sum_i \frac{q_i}{r_i}$$

$$U_E = qV = \frac{1}{4\pi\epsilon_0}\frac{q_1q_2}{r}$$

$$C = \frac{Q}{V}$$

$$C = \frac{\kappa\epsilon_0 A}{d}$$

$$C_p = \sum_i C_i$$

$$\frac{1}{C_s} = \sum_i \frac{1}{C_i}$$

$$I = \frac{dQ}{dt}$$

$$U_c = \frac{1}{2}QV = \frac{1}{2}CV^2$$

$$R = \frac{\rho\ell}{A}$$

$$\mathbf{E} = \rho\mathbf{J}$$

$$I = Ne\upsilon_d A$$

$$V = IR$$

$$R_s = \sum_i R_i$$

$$\frac{1}{R_p} = \sum_i \frac{1}{R_i}$$

$$P = IV$$

$$\mathbf{F}_M = q\mathbf{v} \times \mathbf{B}$$

A = area
B = magnetic field
C = capacitance
d = distance
E = electric field
$\mathcal{E}$ = emf
F = force
I = current
J = current density
L = inductance
ℓ = length
n = number of loops of wire per unit length
N = number of charge carriers per unit volume
P = power
Q = charge
q = point charge
R = resistance
r = distance
t = time
U = potential or stored energy
V = electric potential
υ = velocity or speed
ρ = resistivity
ϕ_m = magnetic flux
κ = dielectric constant

$$\oint \mathbf{B} \bullet d\boldsymbol{\ell} = \mu_0 I$$

$$d\mathbf{B} = \frac{\mu_0}{4\pi}\frac{I\,d\boldsymbol{\ell} \times \mathbf{r}}{r^3}$$

$$\mathbf{F} = \int I\,d\boldsymbol{\ell} \times \mathbf{B}$$

$$B_s = \mu_0 nI$$

$$\phi_m = \int \mathbf{B} \bullet d\mathbf{A}$$

$$\mathcal{E} = \oint \mathbf{E} \bullet d\boldsymbol{\ell} = -\frac{d\phi_m}{dt}$$

$$\mathcal{E} = -L\frac{dI}{dt}$$

$$U_L = \frac{1}{2}LI^2$$

ADVANCED PLACEMENT PHYSICS C EQUATIONS DEVELOPED FOR 2012

GEOMETRY AND TRIGONOMETRY

Rectangle

$A = bh$

Triangle

$A = \frac{1}{2}bh$

Circle

$A = \pi r^2$

$C = 2\pi r$

Rectangular Solid

$V = \ell wh$

Cylinder

$V = \pi r^2 \ell$

$S = 2\pi r\ell + 2\pi r^2$

Sphere

$V = \frac{4}{3}\pi r^3$

$S = 4\pi r^2$

A = area
C = circumference
V = volume
S = surface area
b = base
h = height
ℓ = length
w = width
r = radius

Right Triangle

$a^2 + b^2 = c^2$

$\sin\theta = \frac{a}{c}$

$\cos\theta = \frac{b}{c}$

$\tan\theta = \frac{a}{b}$

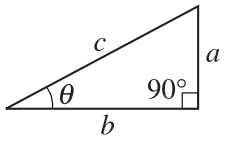

CALCULUS

$\frac{df}{dx} = \frac{df}{du}\frac{du}{dx}$

$\frac{d}{dx}\left(x^n\right) = nx^{n-1}$

$\frac{d}{dx}\left(e^x\right) = e^x$

$\frac{d}{dx}(\ln x) = \frac{1}{x}$

$\frac{d}{dx}(\sin x) = \cos x$

$\frac{d}{dx}(\cos x) = -\sin x$

$\int x^n\,dx = \frac{1}{n+1}x^{n+1},\ n \neq -1$

$\int e^x\,dx = e^x$

$\int \frac{dx}{x} = \ln|x|$

$\int \cos x\,dx = \sin x$

$\int \sin x\,dx = -\cos x$

PHYSICS C: MECHANICS
SECTION II
Time—45 minutes
3 Questions

Directions: Answer all three questions. The suggested time is about 15 minutes for answering each of the questions, which are worth 15 points each. The parts within a question may not have equal weight. Show all your work in this booklet in the spaces provided after each part.

Mech. 1.

A ball of mass m and cross-sectional area A is released from rest near the surface of Earth. The ball experiences a resistive force due to the air that is proportional to the ball's velocity, $\mathbf{F}_r = -bA\mathbf{v}$, where b is a positive constant. Determine all algebraic answers in terms of m, b, A, and fundamental constants.

(a) Draw free-body diagrams for the ball for the following situations. Give each vector a descriptive label and draw them approximately to scale.

A Short Time After the Ball is Released

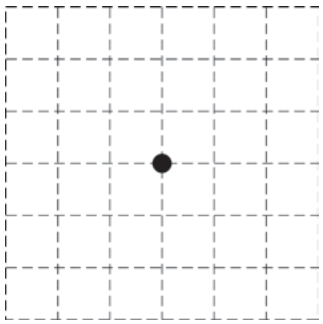

Once the Ball Has Reached Terminal Velocity

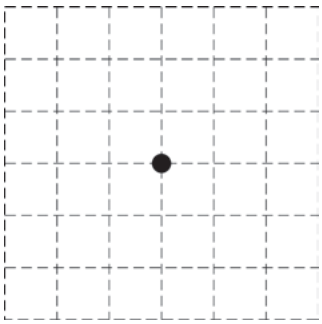

(b) Calculate the terminal velocity v_T of the ball.

Unauthorized copying or reuse of any part of this page is illegal.

GO ON TO THE NEXT PAGE.

(c) Starting from Newton's laws, derive an expression for the time required for the ball to reach one third the terminal velocity.

(d) Sketch the following two graphs of the ball's motion from when the ball is released at time $t = 0$ until it approaches terminal velocity.

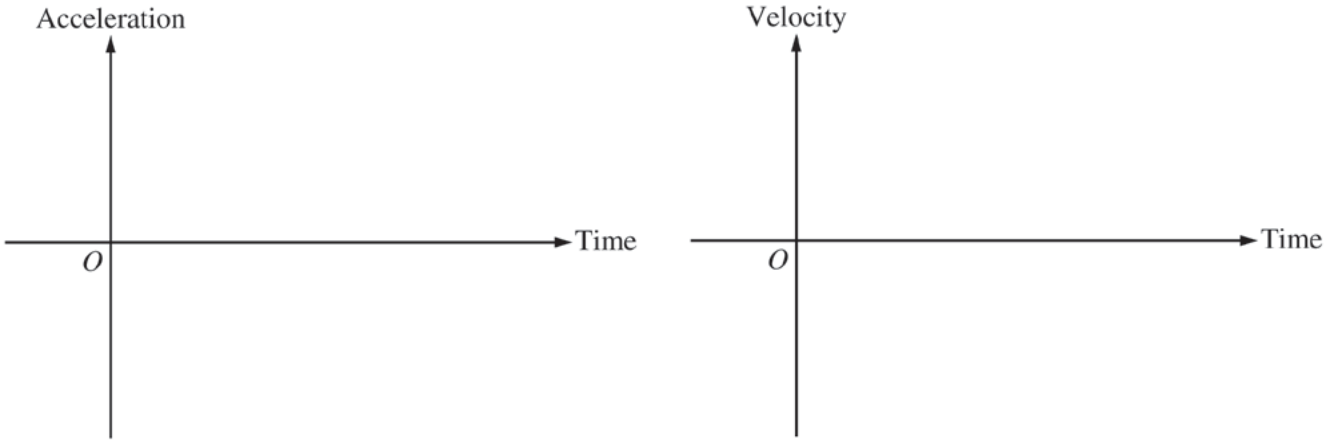

Unauthorized copying or reuse of any part of this page is illegal.

GO ON TO THE NEXT PAGE.

Mech. 2.

A 0.30 kg cart moving at 2.0 m/s to the right collides with a 0.10 kg cart, initially moving at 3.0 m/s to the left. After the collision, the 0.10 kg cart moves to the right with a speed of 1.2 m/s. Assume friction is negligible.

(a) Calculate the magnitude and direction of the velocity of the 0.30 kg cart after the collision.

(b) Is this an elastic collision? Justify your answer.

The 0.30 kg cart is now removed. The 0.10 kg cart continues to move to the right and then collides with and compresses an ideal spring whose right end is attached to a fixed wall.

(c) Calculate the potential energy of the spring when it reaches maximum compression.

Unauthorized copying or reuse of any part of this page is illegal.

(d) The maximum compression of the spring is 0.10 m. Calculate the spring constant of the spring.

(e) Suppose instead that the spring is nonlinear such that the force F due to the spring when it is compressed a distance x is $F = -bx^3$. Calculate the value of the constant b if the spring is compressed 0.10 m.

Unauthorized copying or reuse of any part of this page is illegal.

GO ON TO THE NEXT PAGE.

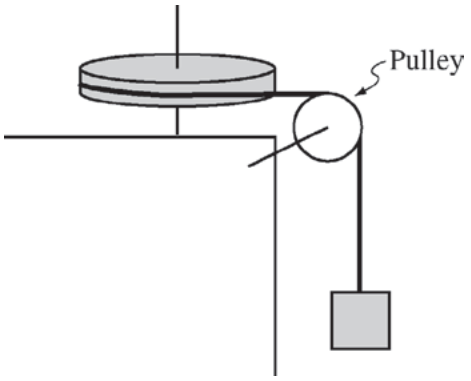

Mech. 3.

A solid disk of radius 0.10 m is mounted on a vertical axis. A string of negligible mass is wrapped around the rim of the disk; passes over a small, lightweight, frictionless pulley as shown above; and is tied to a block of mass 0.05 kg. The system is released from rest, and a computer records the velocity of the falling block as a function of time, as shown below.

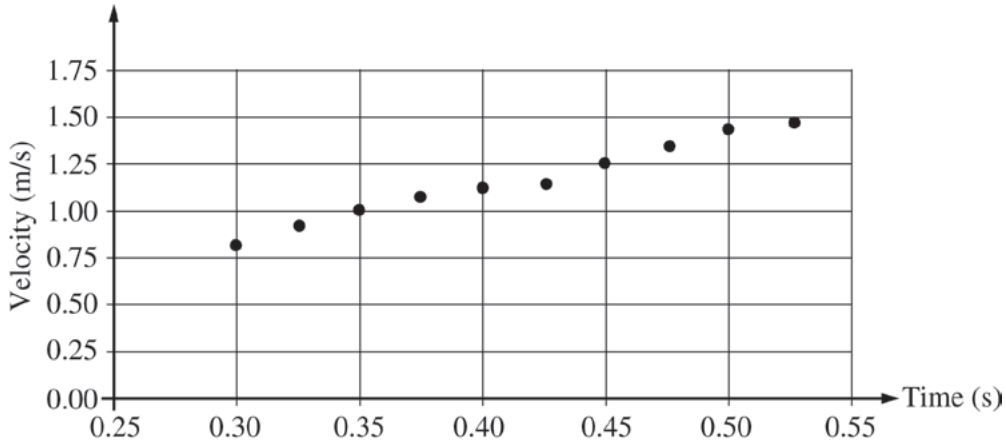

(a) Using the graph above, calculate the acceleration of the falling block.

Unauthorized copying or reuse of any part of this page is illegal.

(b) Use your result from part (a) to calculate the rotational inertia of the disk.

(c) Calculate the angular momentum of the disk at time $t = 0.45$ s.

(d) The disk is removed and replaced with a hoop of the same mass and radius, but with all of its mass concentrated near the rim of the hoop and connected to the axis by lightweight spokes. The experiment is then repeated. Is the angular acceleration of the hoop greater than, less than, or the same as that of the solid disk?

____ Greater than ____ Less than ____ The same

Justify your answer.

Unauthorized copying or reuse of any part of this page is illegal.

THIS PAGE MAY BE USED FOR SCRATCH WORK.

STOP

END OF EXAM

THE FOLLOWING INSTRUCTIONS APPLY TO THE COVERS OF THE SECTION II BOOKLET.

- **MAKE SURE YOU HAVE COMPLETED THE IDENTIFICATION INFORMATION AS REQUESTED ON THE FRONT AND BACK COVERS OF THE SECTION II BOOKLET.**
- **CHECK TO SEE THAT YOUR AP NUMBER LABEL APPEARS IN THE BOX(ES) ON THE COVER(S).**
- **MAKE SURE YOU HAVE USED THE SAME SET OF AP NUMBER LABELS ON ALL AP EXAMS YOU HAVE TAKEN THIS YEAR.**