PHYSICS C: ELECTRICITY AND MAGNETISM
SECTION I
Time—45 minutes
35 Questions

Directions: Each of the questions or incomplete statements below is followed by five suggested answers or completions. Select the one that is best in each case and then fill in the corresponding circle on the answer sheet.

Note: To simplify calculations, you may use $g = 10\ \text{m/s}^2$ in all problems.

1. A battery and lightbulb are connected in series to form a closed circuit. A student observes that the potential difference across the battery is constant. The student also observes that the brightness of the lightbulb decreases over time. Which of the following best explains one of these observations?

	Observation	Explanation
(A)	Decreasing lightbulb brightness	Decreasing internal battery resistance
(B)	Decreasing lightbulb brightness	Increasing lightbulb resistance
(C)	Decreasing lightbulb brightness	Decreasing resistances of the wires connecting the lightbulb and the battery
(D)	Constant battery potential difference	Decreasing lightbulb resistance
(E)	Constant battery potential difference	Increasing potential difference across the lightbulb

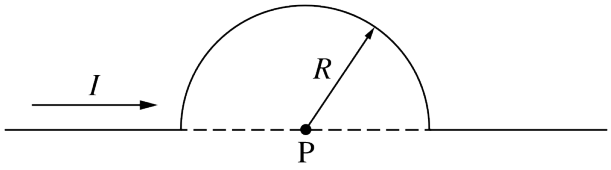

2. A section of a straight wire with current I is curved into a semicircle of radius R, as shown. What is the direction, if any, of the magnetic field at Point P?

   (A) Upward in the plane of the page
   (B) Downward in the plane of the page
   (C) Out of the page
   (D) Into the page
   (E) The magnitude of the magnetic field is zero.

3. Four parallel wires are oriented perpendicular to the plane of the page and located at the corners of a square. Equal amounts of current pass through each wire. Point P is located at the center of the square. Which of the following diagrams shows directions of the currents that would result in a magnetic field of zero at Point P?

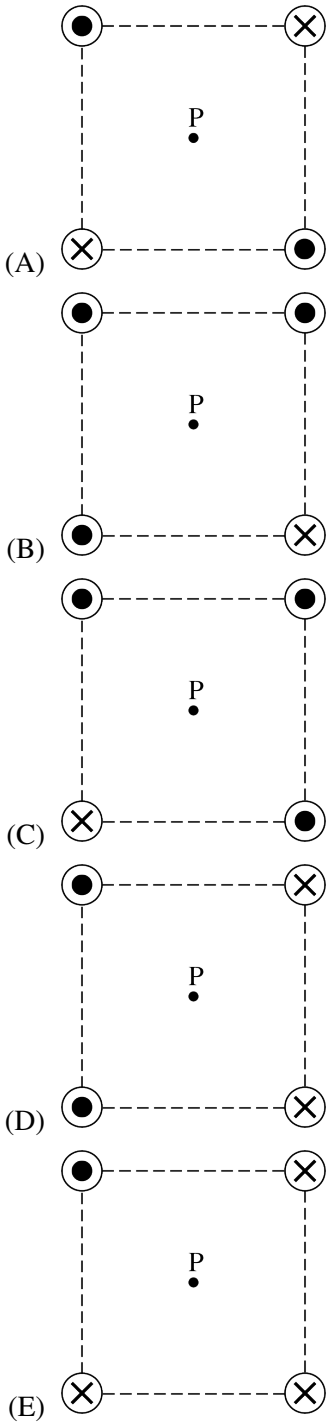

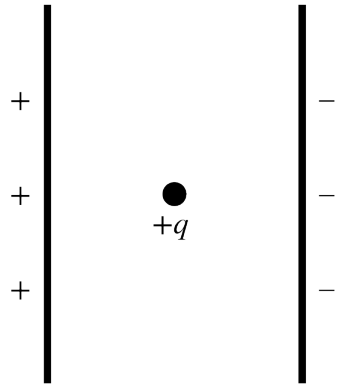

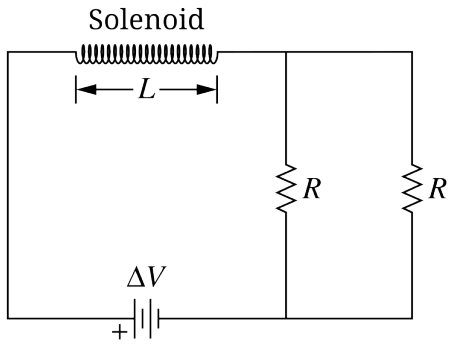

4. A small sphere with charge $+q$, is held at the midpoint between the plates of a parallel plate capacitor, as shown. Gravitational forces are negligible. Which of the following correctly describes the acceleration, if any, of the sphere after it is released from rest?

   (A) The magnitude of the acceleration is constant as the sphere moves to the right.

   (B) The magnitude of the acceleration increases as the sphere moves to the right.

   (C) The sphere does not accelerate.

   (D) The magnitude of the acceleration is constant as the sphere moves to the left.

   (E) The magnitude of the acceleration increases as the sphere moves to the left.

5. A battery with potential difference ΔV is connected in a circuit with two resistors of resistance R and a solenoid of length L with N turns, as shown. The solenoid has negligible resistance, and the length of the solenoid is much longer than the radius of the solenoid. Which of the following expressions represents the magnitude of the magnetic field at the center of the solenoid after the circuit has reached steady-state conditions?

   (A) $\dfrac{\mu_0 \Delta V}{2LR}$

   (B) $\dfrac{\mu_0 N \Delta V}{2LR}$

   (C) $\dfrac{\mu_0 N \Delta V}{LR}$

   (D) $\dfrac{2\mu_0 \Delta V}{LR}$

   (E) $\dfrac{2\mu_0 N \Delta V}{LR}$

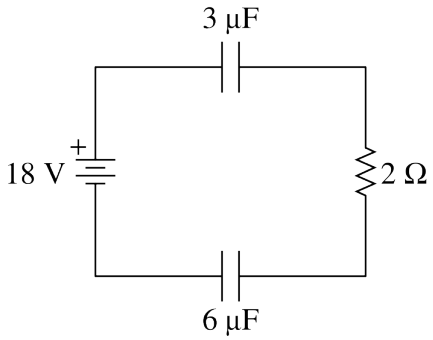

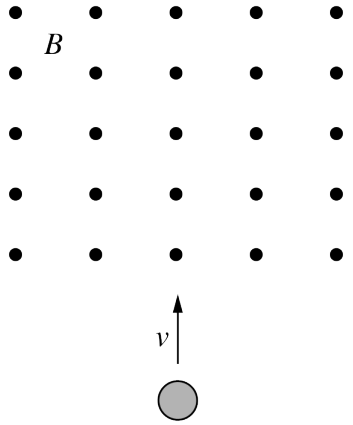

6. The series circuit shown consists of a 3 μF capacitor, a 6 μF capacitor, a 6 Ω resistor, and an 18 V battery. The capacitors are fully charged. Which of the following values represents the charge on the positive plate of the 3 μF capacitor?

   (A) 12 μC
   (B) 24 μC
   (C) 36 μC
   (D) 54 μC
   (E) 162 μC

7. A small sphere of mass m and with charge $4e$ travels toward the top of the page with speed and enters a magnetic field of magnitude B that is directed out of the page, as shown. Which of the following expressions represents the radius of the circular path on which the sphere travels?

   (A) $\frac{mv}{4EB}$
   (B) $\frac{mv}{2EB}$
   (C) $\frac{mv}{EB}$
   (D) $\frac{2mv}{EB}$
   (E) $\frac{4mv}{EB}$

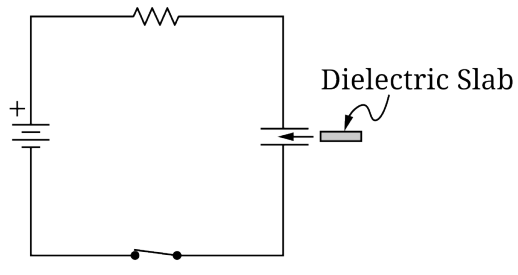

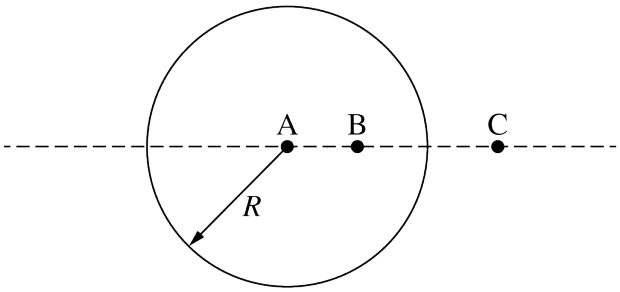

8. A capacitor is connected in series to a resistor, a closed switch, and a battery. After a long time, a dielectric slab is fully inserted between the plates of the capacitor while the battery remains connected in the circuit, as shown. Which of the following correctly describes the effect, if any, on the charge on the top plate of the capacitor and the potential difference across the capacitor a long time after the dielectric slab has been fully inserted?

	Charge	Potential Difference
(A)	Decreases	Stays the same
(B)	Stays the same	Decreases
(C)	Stays the same	Increases
(D)	Increases	Increases
(E)	Increases	Stays the same

9. An isolated, thin, conducting spherical shell of radius R is shown. The total charge on the sphere is $+Q$. Point A is at the center of the sphere. Points B and C are at distances $\frac{R}{2}$ and $\frac{3R}{2}$, respectively, from the center of the sphere. Which of the following expressions compares the magnitude of the electric field E at points A, B, and C?

(A) $E_A < E_B < E_C$
(B) $E_A < E_B = E_C$
(C) $E_A = E_B = E_C$
(D) $E_A = E_B < E_C$
(E) $E_C < E_B < E_C$

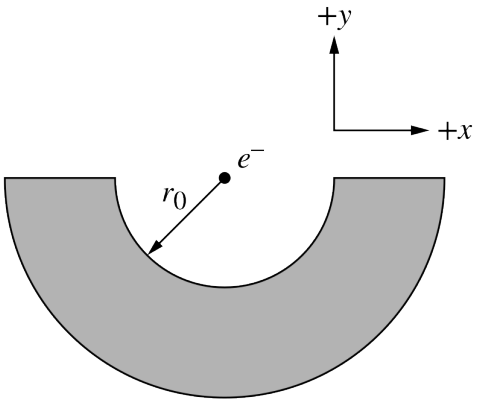

10. A solid conductor with a half-circular shape has a net positive charge. An electron is held at a position that is a distance r_0 from all points along the inner edge of the conductor, as shown. Which of the following correctly describes the electric force F_E exerted on the electron?

    (A) F_E points in the $+y$ direction.

    (B) F_E points in the $-y$ direction.

    (C) F_E points in a direction that is in between the $+y$ and $+x$ directions.

    (D) F_E points in a direction that is in between the $-y$ and $-x$ directions.

    (E) F_E has no direction, because the magnitude of F_E is zero.

11. A student uses wires to connect a battery with potential difference ΔV to three lightbulbs with different resistances to form a closed circuit. The lightbulbs have resistances R, $2R$, and $3R$. The student must construct the circuit in order to maximize the power supplied to the lightbulbs. Which of the following represents the circuit that would maximize the power supplied to the lightbulbs?

(A)
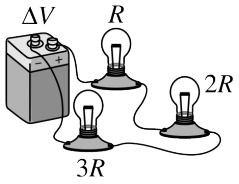

(B)
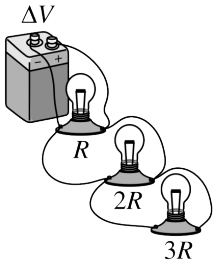

(C)
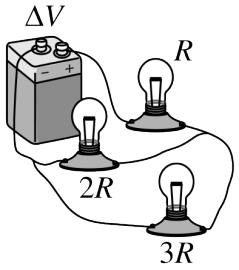

(D)
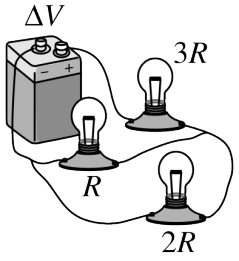

(E)
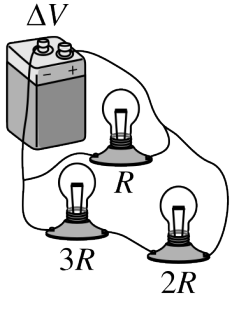

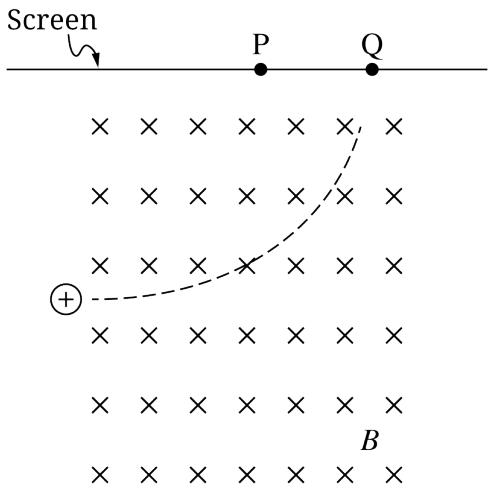

Top View

12. An experiment is designed to show that a positively charged particle will strike Point P on a screen after the particle is launched into an area of uniform magnetic field of magnitude B. When the experiment is conducted, the particle actually strikes the screen at Point Q, as shown. Which of the following could explain this result?

(A) The mass of the particle is smaller than expected.

(B) The speed of the particle is larger than expected.

(C) The charge of the particle is larger than expected.

(D) The magnitude of the magnetic field is larger than expected.

(E) The screen has a uniform negative charge distribution.

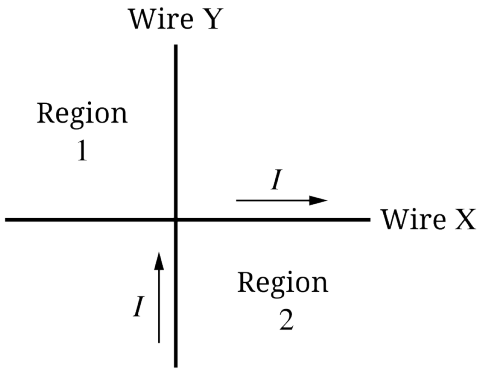

13. Two long, straight, insulated wires, X and Y, carry identical currents of magnitude I. Wire X passes just above Wire Y at a right angle, as shown. What are the directions, if any, of the net magnetic fields B_1 and B_2 in regions 1 and 2, respectively?

	Direction of B_1	Direction of B_2
(A)	Into the page	Into the page
(B)	Into the page	Out of the page
(C)	Out of the page	Into the page
(D)	Out of the page	Out of the page
(E)	$B_1 = 0$	$B_2 = 0$

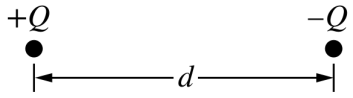

Scenario 1

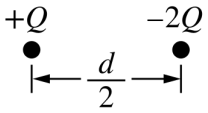

Scenario 2

14. Scenario 1 shows two small spheres with charges $+Q$ and $-Q$ that are held a distance d apart and exert an electric force of magnitude F on each other. In Scenario 2, the charge of the negatively charged sphere is changed to $-2Q$, and the spheres are held a distance $\frac{d}{2}$ apart. Which of the following expressions represents the magnitude of the electric force that the positively charged sphere exerts on the negatively charged sphere in Scenario 2?

(A) $\frac{F}{2}$
(B) F
(C) $2F$
(D) $4F$
(E) $8F$

Questions 15-16

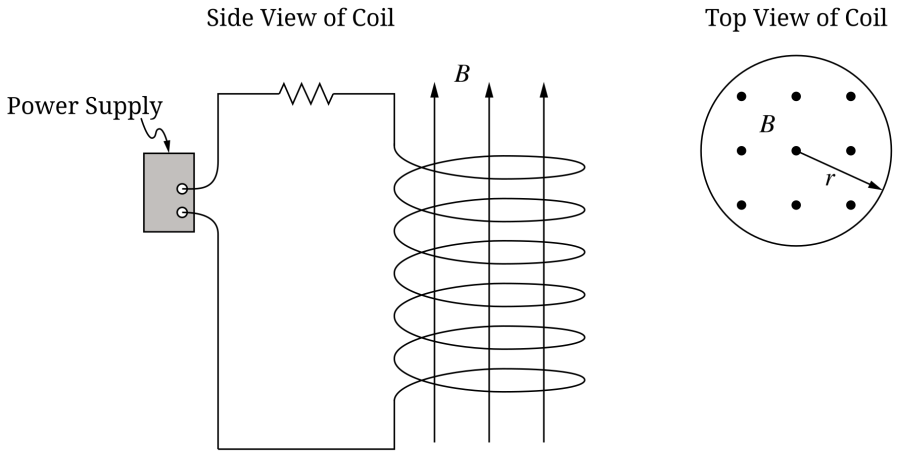

Note: Figures not drawn to scale.

Coils of varying radii R, lengths L, and numbers of turns N are connected to a variable power supply and a resistor, as shown in the Side View of Coil. When the power supply is turned on, a magnetic field of magnitude B is produced, as shown in the Top View of Coil.

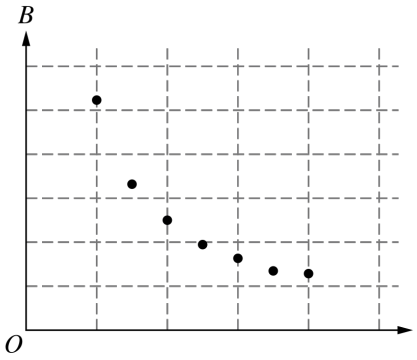

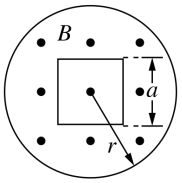

Top View of Coil with Loop

15. In an experiment, a student connects the variable power supply to different coils of wire. The student measures and plots the magnitude of the magnetic field as a function of an unknown variable while keeping all other variables constant. Which of the following identifies the unknown variable that is changed in the experiment and plotted on the horizontal axis of the graph?

    (A) Current in the coil
    (B) Potential difference of the power supply
    (C) Length of the coil
    (D) Cross-sectional area of the coil
    (E) Number of turns in the coil

16. A square metal loop of side length a, where $a < r$, is inserted into the middle of one of the coils. The loop is perpendicular to the magnetic field, as shown in the Top View of Coil with Loop. Starting at time $t = 0$, the potential difference across the variable power supply is increased so that the magnitude of the magnetic field through the coil is given by the equation $B = B_0 + Dt$, where $B_0 = 0.10$ T and $D = 0.020$ T/s. Which of the following is the expression for the induced emf in the loop at time $t = 5$ s?

    (A) Zero
    (B) $(0.02\ \text{V/m}^2)a^2$
    (C) $(0.10\ \text{V/m}^2)a^2$
    (D) $(0.12\ \text{V/m}^2)a^2$
    (E) $(0.20\ \text{V/m}^2)a^2$

Questions 17-18

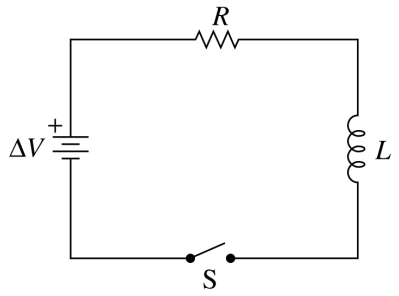

The series circuit shown consists of a battery of potential difference ΔV, a resistor of resistance R, an inductor of inductance L, and Switch S that is initially open. Switch S is then closed.

17. Which of the following statements is true immediately after Switch S is closed?

    (A) The potential difference across the inductor is zero.

    (B) The potential difference across the resistor is ΔV.

    (C) The current in the circuit is at its maximum value.

    (D) The current in the circuit is zero.

    (E) The rate of change of the current in the circuit is zero.

18. Which of the following is true about the current in the circuit after Switch S is closed?

    (A) The current is at its maximum value when the potential difference across the resistor is zero.

    (B) The current is zero when the potential difference across the resistor is ΔV.

    (C) The current is at its maximum value when the potential difference across the inductor is zero.

    (D) The current is zero when the potential difference across the inductor is zero.

    (E) The current is constant at all times.

Questions 19-20

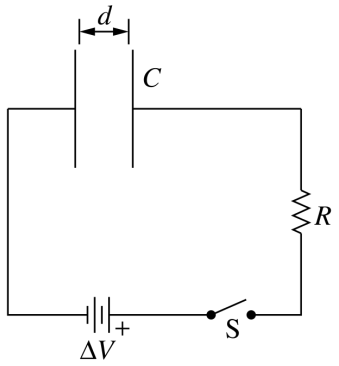

An initially uncharged, air-filled capacitor of capacitance C consists of metal plates that are a distance d apart. The capacitor is connected in series with a battery of potential difference ΔV, a resistor of resistance R, and an open switch S, as shown.

19. The metal plates of the capacitor are returned to their original separation distance d. Switch S remains closed for a long time and is then opened. A dielectric with dielectric constant $\kappa = 5$ is then inserted between the metal plates. Which of the following represents the new potential difference across the capacitor?

(A) $\frac{\Delta V}{5}$
(B) $\frac{\Delta V}{2}$
(C) ΔV
(D) $2\Delta V$
(E) $5\Delta V$

20. The distance between the metal plates is then reduced to $\frac{d}{2}$ while the capacitor is still connected to the circuit. Switch S is then closed for a long time. Which of the following represents the new potential difference across the capacitor?

(A) $\frac{\Delta V}{4}$
(B) $\frac{\Delta V}{2}$
(C) ΔV
(D) $2\Delta V$
(E) $4\Delta V$

Questions 21-23

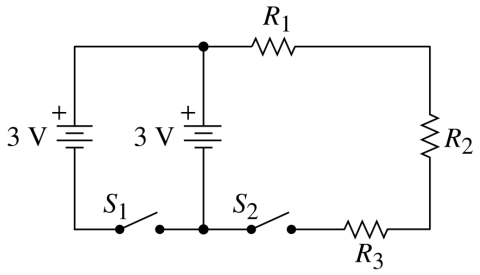

Two ideal batteries, switches S_1 and S_2, and resistors R_1, R_2, and R_3 are connected in the circuit shown. Each battery has an emf of 3 V, and each resistor has a resistance of 4 Ω. Switches S_1 and S_2 are both initially open.

21. Both switches are closed. Which of the following values represents the current in Resistor R_2?

    (A) 0.00 A
    (B) 0.25 A
    (C) 0.50 A
    (D) 1.75 A
    (E) 1.50 A

22. Switch S_2 is closed, while Switch S_1 remains open. Which of the following values represents the current in Resistor R_2?

    (A) 0.00 A
    (B) 0.25 A
    (C) 0.50 A
    (D) 1.75 A
    (E) 1.00 A

23. With both switches open, Resistor R_3 is replaced with a capacitor of capacitance 9 μF. Both switches are then closed. Which of the following values represents the current in Resistor R_2 after a long time?

    (A) 0.000 A
    (B) 0.250 A
    (C) 0.375 A
    (D) 0.500 A
    (E) 0.750 A

Questions 24-26

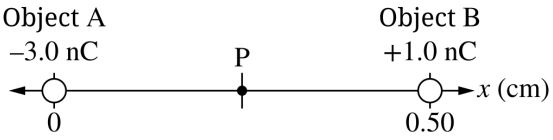

Object A and Object B have the same mass and are positioned on the x-axis, as shown. Object A is located at $x = 0$ and has a net charge of -3.0 nC. Object B is located at $x = 0.50$ cm and has a net charge of $+1.0$ nC. Point P is halfway between the objects.

24. Which of the following most nearly represents the value of the electric potential at Point P?

    (A) $-14,400$ V
    (B) -7200 V
    (C) -3600 V
    (D) 3600 V
    (E) 7200 V

25. The objects are no longer fixed and are released from rest at time $t = 0$. Object B has an acceleration of magnitude a_0 at time $t = 0$. Which of the following represents the magnitude and direction of the acceleration for Object A at time $t = 0$?

	Magnitude of Acceleration	Direction of Acceleration
(A)	$a_0/3$	$+x$
(B)	$a_0/3$	$-x$
(C)	a_0	$+x$
(D)	a_0	$-x$
(E)	$3a_0$	$+x$

26. Other than infinitely far away from either object, which of the following, if any, indicates a region on the x-axis where the magnitude of the electric field could be zero?

    (A) In the region $x < 0$
    (B) In the region $0 < x < 0.25$ cm
    (C) In the region 0.25 cm $< x < 0.50$ cm
    (D) In the region $x > 0.50$ cm
    (E) There is no location on the x-axis other than infinitely far away where the electric field is zero.

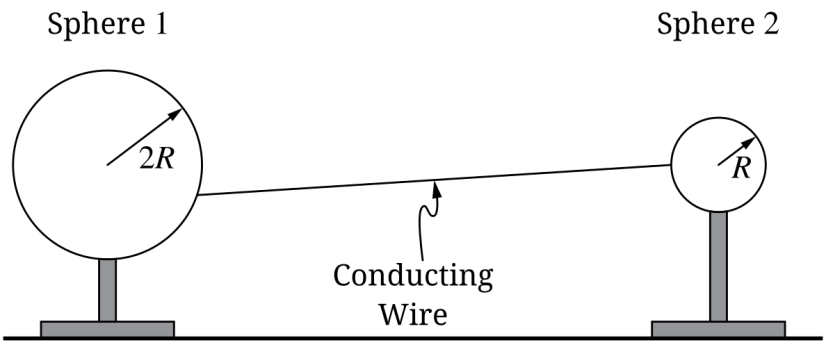

Note: Figure not drawn to scale.

27. Conducting spheres 1 and 2 on insulating stands have radii $2R$ and R, respectively. The spheres are very far apart. Sphere 1 has an initial net charge $+Q$ and Sphere 2 is initially neutral. The spheres are then connected by a conducting wire, as shown. The wire is then removed. Which of the following represents the value of the net charge on Sphere 1 after the wire is removed?

(A) $\frac{1}{2}Q$

(B) $\frac{2}{3}Q$

(C) $\frac{3}{4}Q$

(D) $\frac{4}{5}Q$

(E) Q

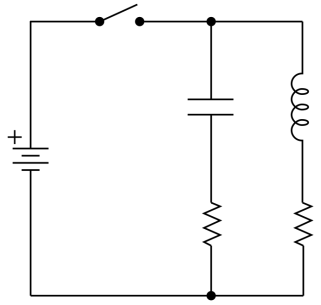

28. The circuit shown consists of a battery, two resistors, an uncharged capacitor, an inductor, and a switch that has been open for a long time. The switch is closed at time $t = 0$. Which of the following pairs of graphs best represents the potential differences V_C and V_L across the capacitor and the inductor, respectively, as functions of time starting immediately after time $t = 0$?

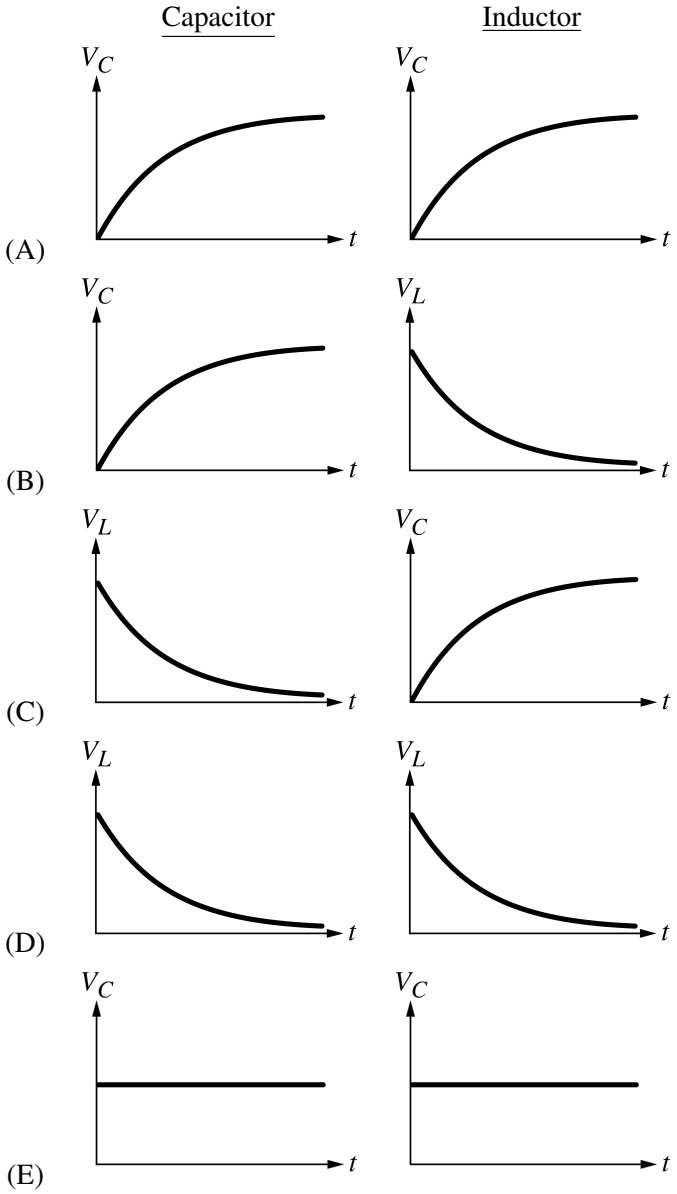

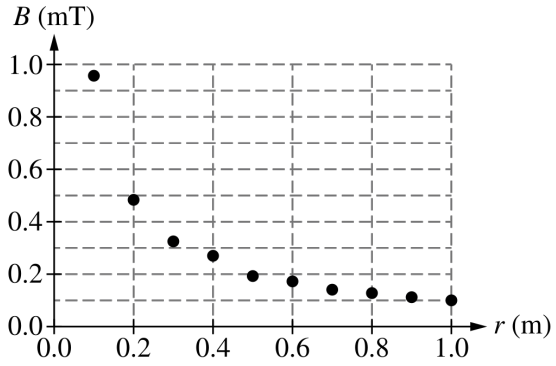

29. A long cylindrical conductor of radius 0.05 m carries a current. The current is distributed over the cross-sectional area of the conductor with a uniform current density. The graph represents the magnetic field B at various distances r measured radially outward from the center of the conductor. Which of the following correctly identifies the proportionality between B and r for $r > 0.05$ m and explains how the data illustrate Ampere's law?

	Proportionality	Explanation
(A)	$B \propto 1/r$	The circumference of the Amperian circle is proportional to r.
(B)	$B \propto 1/r$	The current density enclosed by the Amperian circle is proportional to $.r$
(C)	$B \propto 1/r^2$	The current density at the Amperian surface is proportional to $.r^2$
(D)	$B \propto 1/r^2$	The area of an Amperian circle of radius r is proportional to r^2.
(E)	$B \propto 1/r^2$	The area of a spherical Amperian surface is proportional to r^2.

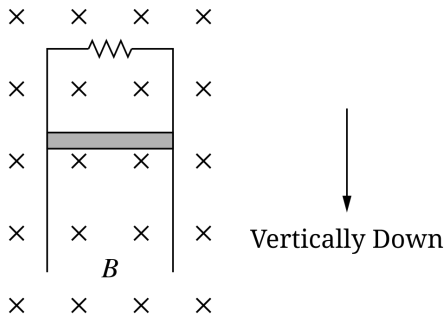

30. A conducting bar is connected so that it can move with negligible friction along two long vertical conducting rails of negligible resistance. The bar is placed in a uniform magnetic field that is directed into the page. The rails are connected by a resistor, as shown. The bar is released from rest, and initially accelerates downward. A current is induced in the bar as the bar falls. After a long time, which of the following best describes and explains the motion of the bar?

	Acceleration of Bar	Explanation
(A)	Zero	The electric force will eventually balance the gravitational force.
(B)	Zero	The magnetic force will eventually balance the gravitational force.
(C)	Nonzero	The magnetic force will eventually balance the gravitational force.
(D)	Nonzero	The current in the bar will eventually become constant.
(E)	Nonzero	The magnitude of the gravitational force will always be greater than the magnitude of the magnetic force.

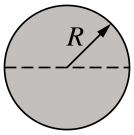

31. An isolated, solid, conducting sphere of radius R has a net positive charge. Which pair of graphs represents the magnitude of the electric field E and the electric potential V as functions of the radial distance r from the center of the sphere?

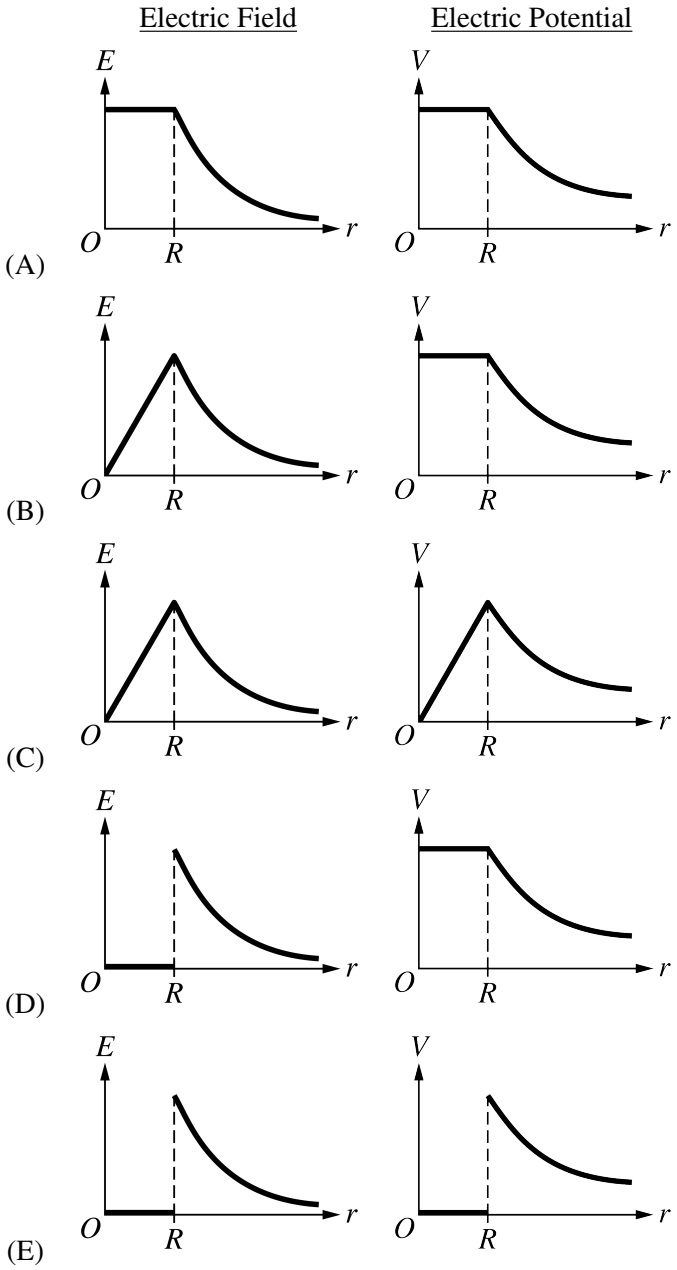

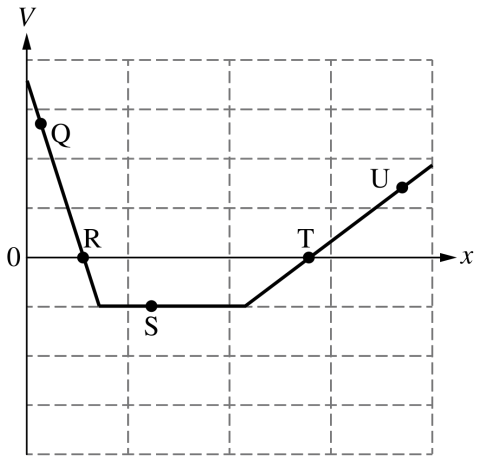

32. The graph shows the electric potential V as a function of position x in a region of space. Points Q, R, S, T, and U are indicated on the graph. Which of the following indicates a point where the electric field $E_x = 0$ and a point where E_x has the greatest magnitude?

	$E_x = 0$	E_x has the greatest magnitude
(A)	R	Q
(B)	R	U
(C)	S	R
(D)	S	T
(E)	U	R

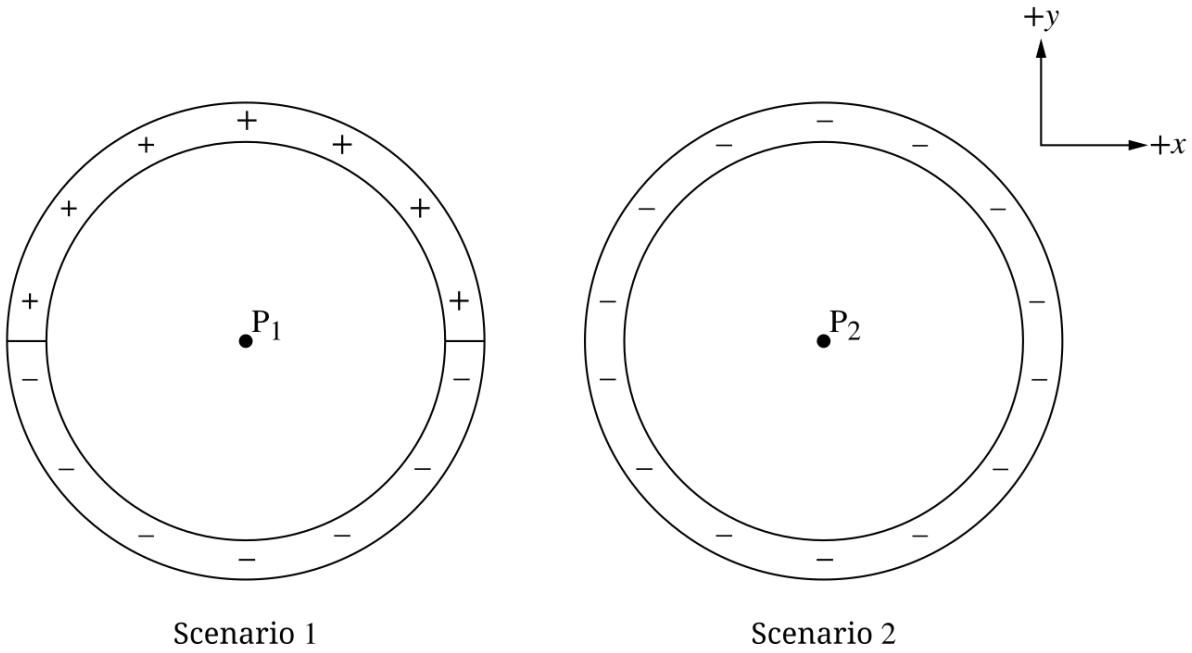

33. In Scenario 1, two halves of a thin, nonconducting, circular ring each have uniform charge of equal value and opposite sign. Point P_1 is at the center of the ring where the net electric field is E_1. In Scenario 2, the first circular ring is replaced by a thin, nonconducting, circular ring that has uniform negative charge. The net electric field at Point P_2 is E_2. Which statement best describes E_1 and E_2?

(A) $|E_1| = |E_2| = 0$, and E_1 has no direction

(B) $|E_1| > |E_2| = 0$, and E_1 points in the $+y$-direction

(C) $|E_1| > |E_2| = 0$, and E_1 points in the $-y$-direction

(D) $|E_1| = |E_2|$, E_1 points in the $+y$-direction, and E_2 points in the $-y$-direction

(E) $|E_1| = |E_2|$, E_1 points in the $-y$-direction, and E_2 points in the $+y$-direction

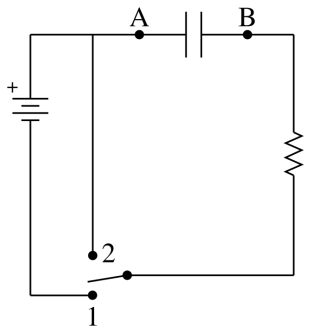

34. The circuit shown consists of a battery, a resistor, an uncharged capacitor, and a switch. Points A and B represent locations on each side of the capacitor where electric potentials V_A and V_B can be measured, respectively. The switch is initially closed to Position 1, and current is in the resistor at time t_1. The switch is later closed to Position 2, and current is in the resistor at time t_2. Which of the following describes how the sign of the potential difference $\Delta V_C = V_B - V_A$ changes, if at all, and how the direction of the current I_R in the resistor changes from time t_1 to time t_2?

	Change in ΔV_C	Change in direction of I_R
(A)	From positive to negative	From down to up
(B)	From negative to positive	From down to up
(C)	From negative to positive	From up to down
(D)	No change	From down to up
(E)	No change	From up to down

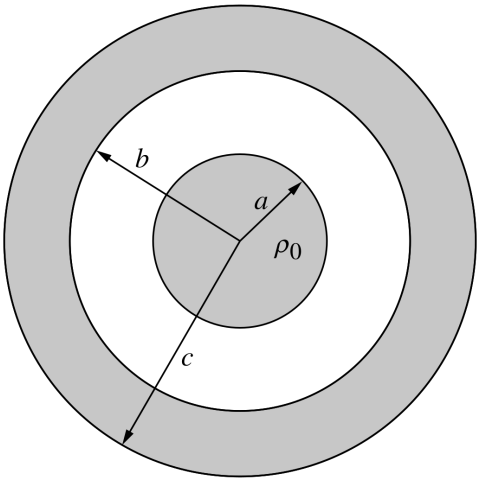

35. A solid nonconducting sphere has radius $r = a$ and uniform volume charge density ρ_0. The sphere is surrounded by a conducting shell with inner radius $r = b$ and outer radius $r = c$, as shown. The conducting shell has a net charge of zero. Which of the following represents the magnitude of the electric field E in region $r < a$ and in region $b < r < c$?

	E for $r < a$	E for $b < r < c$
(A)	$\frac{\rho_0 r}{3\varepsilon_0}$	Zero
(B)	$\frac{\rho_0 r}{3\varepsilon_0}$	$\frac{\rho_0 r}{3\varepsilon_0}$
(C)	$\frac{\rho_0 r}{3\varepsilon_0}$	$\frac{\rho_0 a^3}{3\varepsilon_0 r^2}$
(D)	$\frac{\rho_0 a^3}{3\varepsilon_0 r^2}$	Zero
(E)	$\frac{\rho_0 a^3}{3\varepsilon_0 r^2}$	$\frac{\rho_0 r}{3\varepsilon_0}$

STOP
END OF SECTION I

PHYSICS C: ELECTRICITY AND MAGNETISM

SECTION II

Time—45 minutes

3 Questions

Directions: Answer all three questions. The suggested time is about 15 minutes for answering each of the questions, which are worth 15 points each. The parts within a question may not have equal weight. Show all your work in this booklet in the spaces provided after each part.

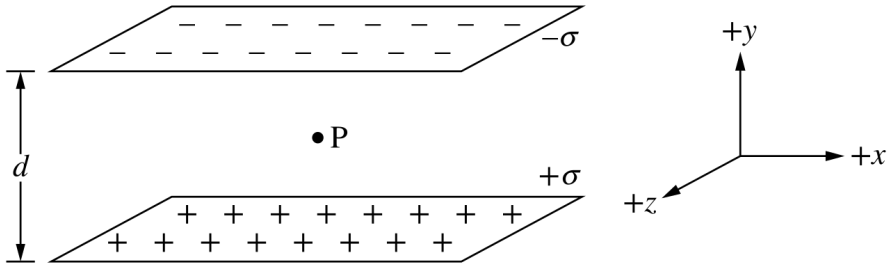

Perspective View

Note: Figure not drawn to scale.

1. Two thin, flat, metallic sheets lie in the *xz*-plane. The top sheet has uniform charge density $-\sigma$ and the bottom sheet has uniform charge density $+\sigma$. The sheets are separated by distance d and Point P is halfway between the centers of the sheets, as shown in the Perspective View.

   (a) i. Draw an appropriate Gaussian surface on the following Front View that can be used to determine the magnitude of the electric field E at Point P.

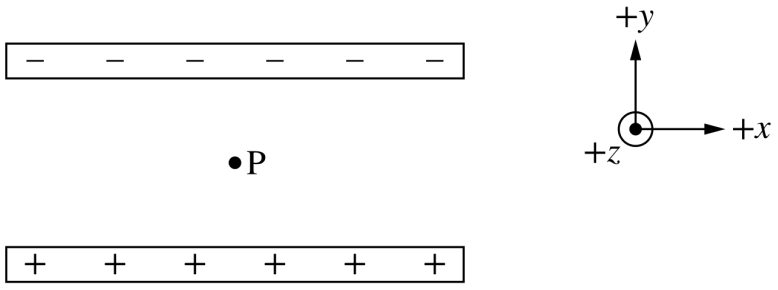

Front View

   ii. Using Gauss's law and the surface drawn in part (a)(i), derive an expression for the magnitude of the electric field E at Point P. Express your answer in terms of σ, d, and fundamental constants, as appropriate.

   iii. Using integral calculus, derive an expression for the magnitude of the potential difference V between the sheets. Express your answer in terms of σ, d, and fundamental constants, as appropriate.

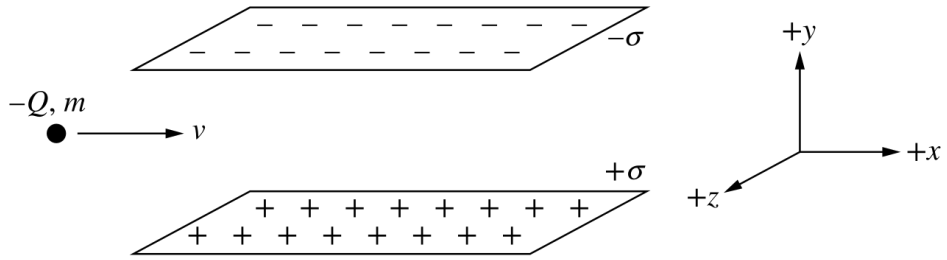

Perspective View

Note: Figure not drawn to scale.

A uniform magnetic field (not shown) is added in the region between the sheets.

A small sphere with negative charge $-Q$ and mass m enters the region between the sheets with velocity v in the $+x$-direction. The velocity of the sphere remains constant.

(b) The electric field in the region between the sheets has magnitude E. Gravitational forces are NOT negligible.

i. On the following dot, which represents the sphere, draw and label the forces (not components) that act on the sphere as the sphere travels in the region between the sheets. Each force must be represented by a distinct arrow starting on, and pointing away from, the dot.

ii. State the direction of the magnetic field in the region between the sheets such that the sphere travels in the $+x$-direction with constant velocity v. Express your answer according to the given coordinate axes.

iii. Derive an expression for the magnitude of the magnetic field B_1 in the region between the sheets such that the sphere travels with velocity v in the $+x$-direction. Express your answer in terms of Q, m, v, E, and fundamental constants, as appropriate.

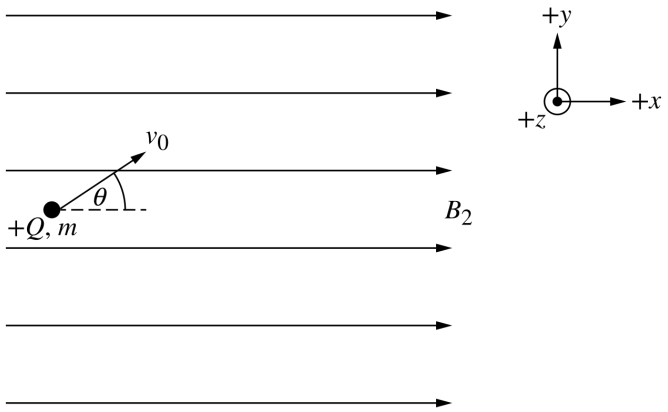

(c) In a new scenario, at time $t = 0$, a small sphere with positive charge $+Q$ and mass m is moving with velocity v_0 at an angle θ from the $+x$-axis in a region of space with uniform magnetic field B_2, as shown. The magnitude of B_2 is large enough so that all other fields are negligible.

i. On the following axes, sketch a graph of the x-component of the velocity of the sphere as a function of time t as the sphere travels through the magnetic field. The initial x-component of the velocity of the sphere is v_{0x}.

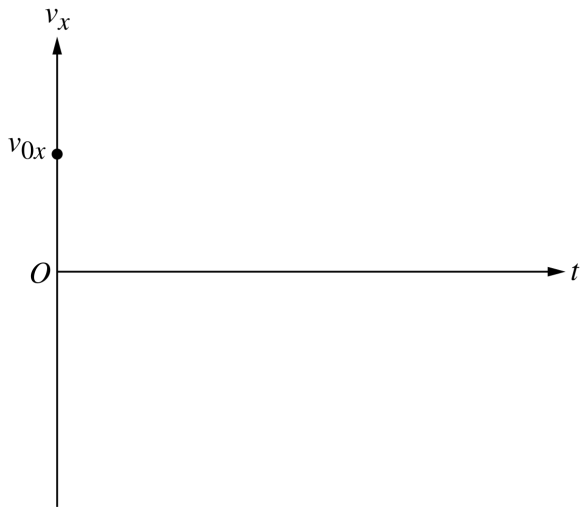

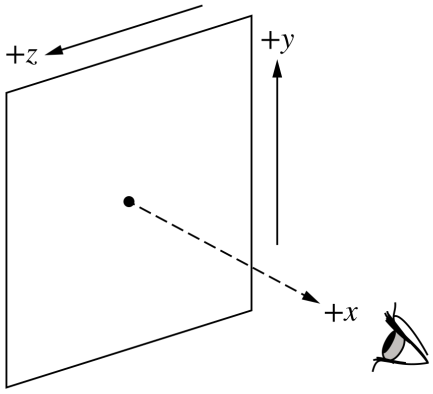

ii. The motion of the sphere as the sphere is moving in the magnetic field is observed from a point on the x-axis, as shown. Describe the motion of the sphere as observed from the point on the x-axis.

iii. During the time in which the sphere travels in the magnetic field, does the kinetic energy of the sphere always increase, always decrease, remain the same, or vary periodically as a function of time?

_____ always increases
_____ always decreases
_____ remains the same
_____ varies periodically as a function of time

Justify your answer.

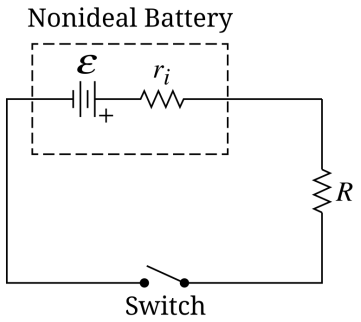

2. The circuit shown consists of a nonideal battery, a switch, and a resistor with resistance R. The emf of the nonideal battery is ε, and the internal resistance of the nonideal battery is r_i.

   (a) i. Derive an expression for the current I in the resistor of resistance R when the switch is closed. Express your answer in terms of R, ε, r_i, and fundamental constants, as appropriate.

   ii. Determine an expression for the power P dissipated by the resistor of resistance R. Express your answer in terms of R, ε, r_i, and fundamental constants, as appropriate.

   iii. In the circuit shown, the potential difference across the terminals of the nonideal battery is ΔV_1. The resistor of resistance R is replaced with a resistor of resistance $2R$. The new potential difference across the terminals of the nonideal battery is ΔV_2. Explain why ΔV_2 is greater than ΔV_1.

   (b) Draw a schematic diagram of a circuit that can be used to experimentally determine r_i. The following equipment must be used: the nonideal battery, a variable resistor, a voltmeter, an ammeter, and wires.

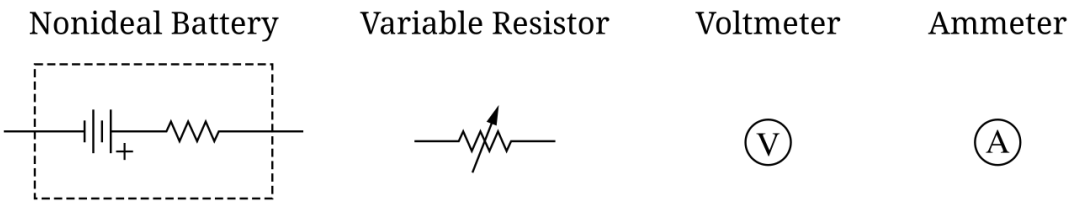

(c) Students create a circuit with the nonideal battery, variable resistor, voltmeter, ammeter, and wires. The students conduct an experiment to determine r_i. In the experiment, the students change the resistance of the variable resistor, correctly measure the current I from the nonideal battery, and correctly measure the potential difference ΔV_T across the terminals of the nonideal battery. The students plot ΔV_T as a function of I, as shown in the graph.

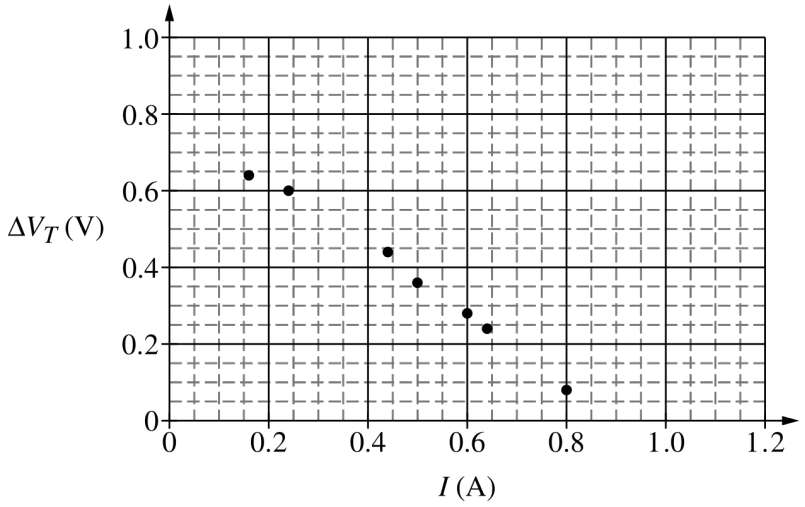

i. Draw the best-fit line for the data.

ii. Using the best-fit line, calculate r_i.

(d) The original nonideal battery is replaced with a new nonideal battery that has emf 2ε and internal resistance r_i. The experiment described in part (c) is repeated. A new graph (not shown) is plotted of ΔV_T as a function of I for the new nonideal battery.

i. Indicate by what factor the vertical intercept from the new graph will increase or decrease, if at all, as compared to the original graph in part (c).

ii. Indicate by what factor the slope from the new graph will increase or decrease, if at all, as compared to the original graph in part (c).

(e) It is discovered that the wires that connect the resistor to the battery have nonnegligible resistance. How does the actual internal resistance of the battery compare to the value calculated in part (c)(ii)? Briefly justify your answer.

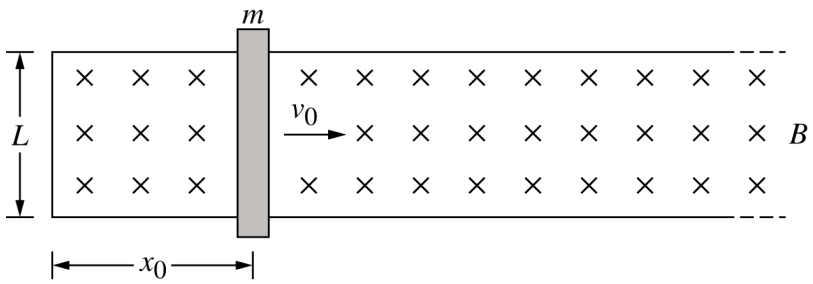

3. A conducting bar of mass m and resistance R slides to the right along a pair of parallel, horizontal conducting rails. At time $t = 0$, the bar is at position x_0 and has speed v_0. The rails are a distance L apart and are connected by a vertical conducting rail at one end. The bar and the rails are in a uniform magnetic field that points into the page with magnitude B, as shown. Frictional forces and the resistances of the rails are negligible.

   (a) i. Derive an expression for the value of the current induced in the bar at time $t = 0$. Express your answer in terms of m, R, x_0, v_0, L, B, and physical constants, as appropriate.

   ii. Using Newton's second law, derive the differential equation $\frac{dv}{dt} = -\frac{(BL)^2}{mR}v$, where v is the speed of the bar as a function of time t as the bar slides along the rails starting at time $t = 0$.

   iii. Using integral calculus, derive a solution to the differential equation of part (a)(ii) for the speed of the bar as a function of time t as the bar slides along the rails starting at time $t = 0$. Express your answer in terms of m, R, x_0, v_0, L, B, t, and physical constants, as appropriate.

   (b) On the following axes, sketch the induced current I in the bar as a function of time t as the bar slides along the rails.



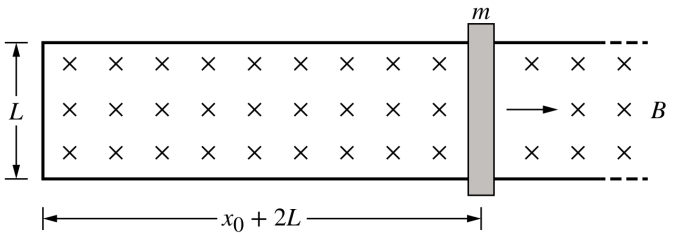

(c) In a new situation, the resistance of each rail is NOT negligible. Each rail has cross-sectional area A and resistivity ρ. At time $t = 0$, the bar is at position x_0 and has velocity v_0 to the right. At time t_1, the bar is at position $x_0 + 2L$, as shown.

i. Compared to the sketch in part (b), is the value of the vertical intercept of the new sketch larger, smaller, or the same? Justify your answer.

ii. Compared to the sketch in part (b), is the absolute value of the slope of the new sketch at time $t = 0$ larger, smaller, or the same? Justify your answer.

iii. Derive an expression for the total resistance R_{total} of the closed circuit at time t_1. Express your answer in terms of R, x_0, L, A, ρ, and fundamental constants, as appropriate.

STOP
END OF EXAM