AP BIOLOGY | UNIT 4

TOPIC 4.3

Signal Transduction Pathways

Relay proteins, second messengers, and phosphorylation cascades transfer and amplify information from an activated receptor.

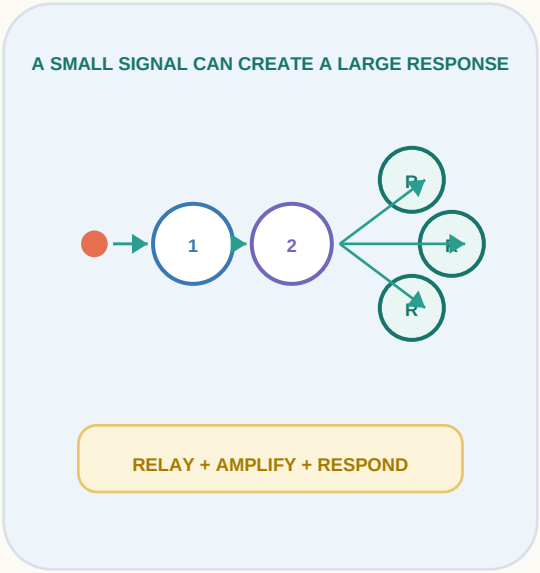

THE CORE CAUSAL CHAIN

RECEPTOR becomes active → **RELAY** passes information → **AMPLIFICATION** multiplies signal → **RESPONSE** target changes

BY THE END, YOU SHOULD BE ABLE TO...

1. Explain how phosphorylation and second messengers relay signals.
2. Explain how signaling pathways amplify information.
3. Predict how a pathway change alters the response.

CENTRAL IDEA

Pathways are controlled chains. Each active component changes the next, so pathway organization determines signal strength, specificity, and duration.

1 Relays, phosphorylation, and amplification

Molecular interactions pass information through the cytoplasm; branching and enzyme activity can turn a small input into a large response.

TWO COMMON RELAY STRATEGIES

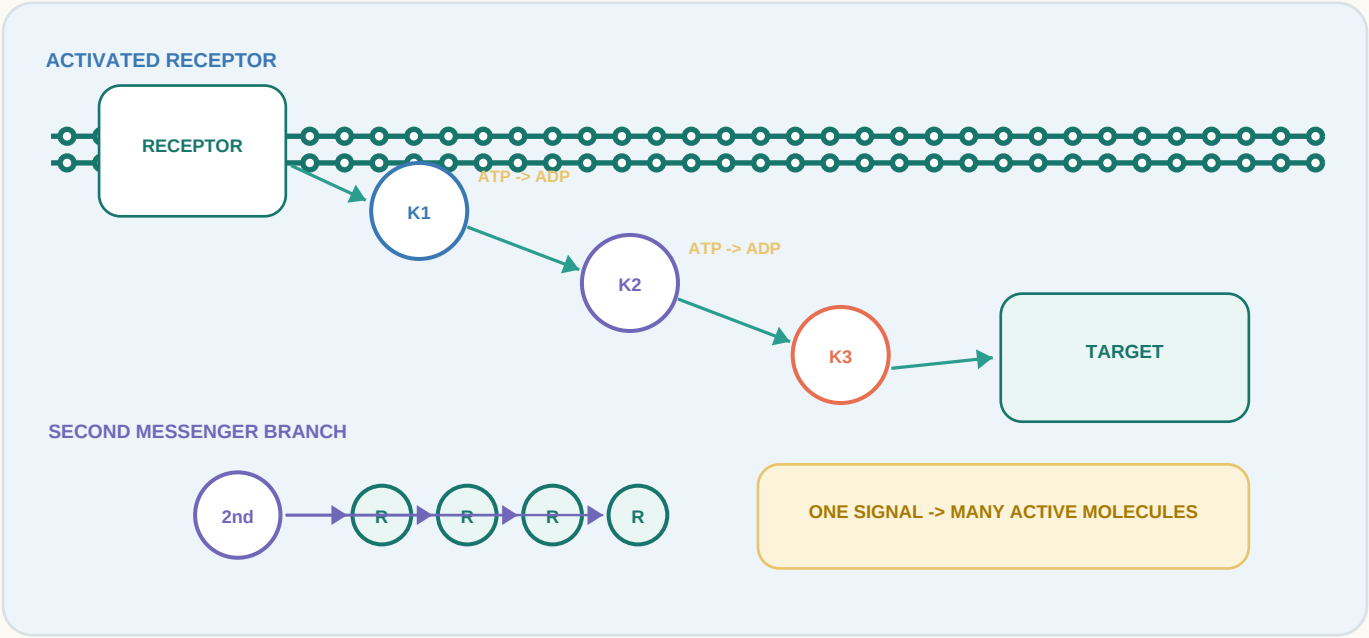

PATHWAY COMPONENTS

RELAY PROTEIN

passes information to another component

PROTEIN KINASE

adds phosphate and changes activity

PHOSPHATASE

removes phosphate and helps reset

2ND MESSENGER

small molecule spreads the signal

KINASES ADD PHOSPHATE | PHOSPHATASES REMOVE PHOSPHATE

COMMON ERROR

Phosphorylation does not always activate a protein. Adding a phosphate changes protein activity; the effect depends on the specific protein.

2

Pathway changes alter the cellular response

A mutation, inhibitor, or constitutively active component changes information flow; the component's position helps predict the final effect.

COMPARE THREE PATHWAY STATES

NORMAL

signal controls activation



NORMAL RESPONSE

BLOCKED COMPONENT

information stops downstream



WEAK / NO RESPONSE

ALWAYS-ACTIVE COMPONENT

pathway runs without signal



EXCESS RESPONSE

USE POSITION TO PREDICT EFFECT

UPSTREAM BLOCK

Many downstream events lose activation.

DOWNSTREAM BLOCK

Earlier events occur, but one output is lost.

ACTIVE KINASE

Downstream targets may activate without ligand.

ACTIVE PHOSPHATASE

The pathway may shut off too quickly.

KEY IDEA

To predict a pathway change, locate the altered component, decide whether it loses or gains activity, and trace the effect downstream.